ASSEMBLY PART NO. AND CH. CODE	NO.	PART NAME	MATERIAL	COLOR	QTY.
7327-6126	①	COVER	PES	NATURAL	1
	②	HOUSING	POLYAMIDE-6T	GREEN	1
	③	FUSE ELEMENT FOR 40A	COPPER ALLOY	——	1

LASER MARK SPECIFIED POSITION
レーザーマーカー指定位置

COVE INDICATION カバー表示 (2/1)	INDCATION PATTERN	40A
	PATTERN 1 パターン1	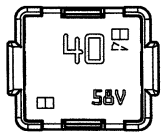
	PATTERN 2 パターン2	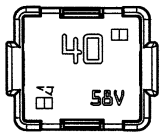

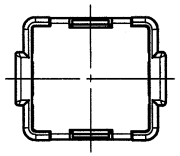

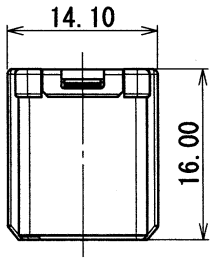

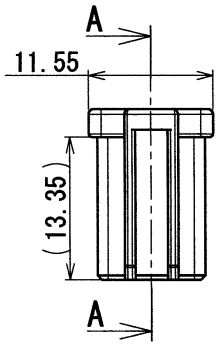

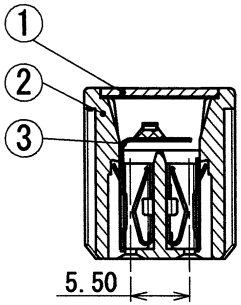

SEC. A-A

注記
1. 相手端子 : 7114-2343-02

NOTE
1. TERMINAL : 7114-2343-02

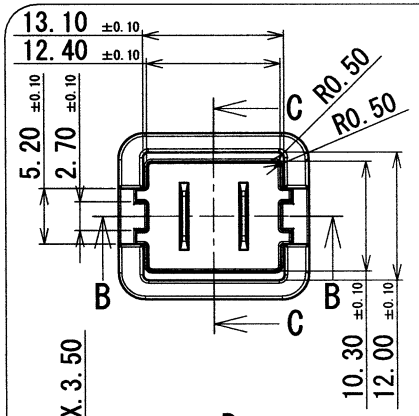

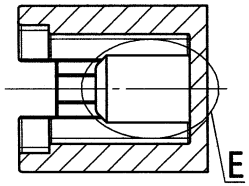

SEC. C-C

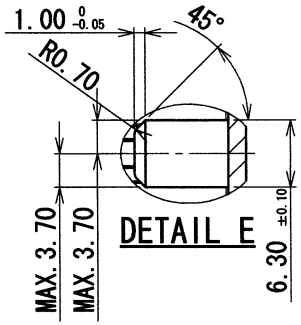

DETAIL E

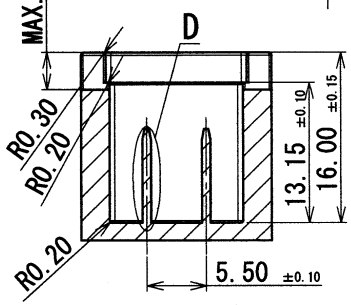

SEC. B-B

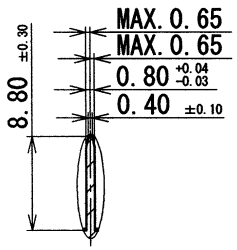

DETAIL D

MEASUREMENT TABLE 対応表 (○: 適合、×: 不適合) CONFORMING NONCONFORMING

	CAVITY OF A1-TYPE 従来キャビティ	CAVITY OF A1 S-TYPE A1 S用キャビティ
A1 S-TYPE	×	○
A1-TYPE	○	○

MATING CAVITY(2/1)

ISSUE MARK

LET	DATE	REVISION RECORD	NO.	CHKD
	03/12/18	NEW	C03-R550	N.0

GENERAL TOLERANCE

	10MAX	50MAX	100MAX	250MAX	2500VR	ANGLE	ECCENT
A	±0.15	±0.2	±0.3	±0.5	±0.75	±30'	0.1
B	±0.2	±0.3	±0.55	±0.95	±1.4	±30'	0.1
Ⓒ	±0.3	±0.5	±0.8	±1.4	±2	±30'	0.15

SPECIFIED

MASS g

CUSTOMER
CUSTOMER PART NO. | CUSTOMER DWG NO.
OFFICE | TRIAL PART NO.
VENDOR
VENDOR NO.

DWG TYPE	DWG SOURCE	DWG DATE	UNIT	SCL	ANGLE
R	NEW	02/12/04	mm	2:1	3

APPROVED	CHECKED	CHECKED	DESIGN	DRAWN
近藤	——	戸塚	M. IWATA	大橋
03.12.22	——	03.12.19	01/02/01	03.12.18

MATL. SPEC. SEE TABLE
TREAT. & FIN.

NAME
HIGH CURRENT FUSE LINKS(大電流ヒューズ)
A1 S-TYPE ASSEMBLY 40A

PART NO. / CH. CODE 7327-6126
DWG NO. 7327-6126:R
SET DWG NO.

YAZAKI CORPORATION