ASSEMBLY PART NO. AND CH. CODE	NO.	PART NO. AND CH. CODE	PART NAME	MATERIAL	COLOR	QTY.
7327-6167, A (50A-30A-50A)	①	7158-9209	COVER	PES	NATURAL	1
	②	7183-9750-30	HOUSING	PA6-T	BLACK	1
	③	7227-6127	ELEMENT SUB ASSEMBLY 50A	COPPER ALLOY	——	2
	④	7227-6125	ELEMENT SUB ASSEMBLY 30A	COPPER ALLOY	——	1

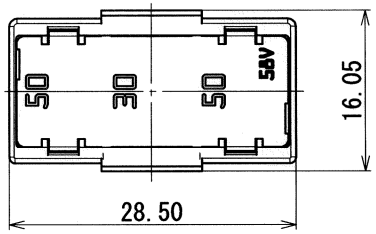

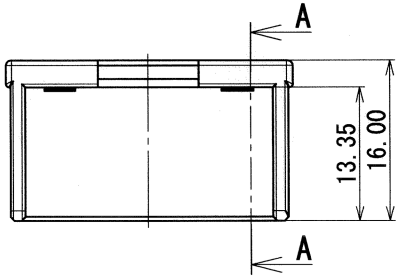

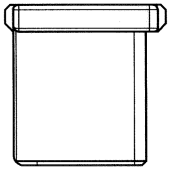

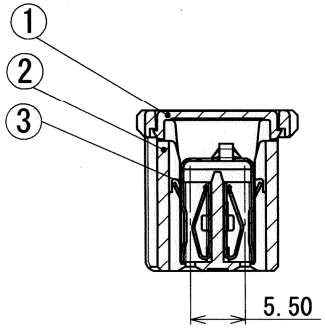

SEC. A-A

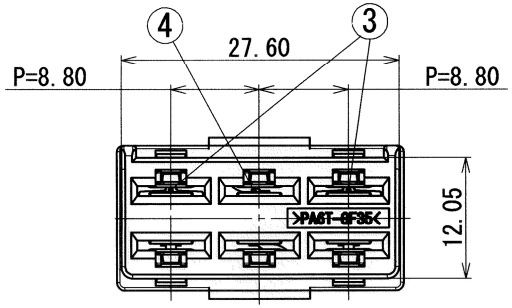

注記

1. 嵌合相手端子品番: 7114-2876

NOTE

1. MATING TERMINAL PART NO.: 7114-2876

GENERAL TOLERANCE											
	10 MAX	50 MAX	100 MAX	250 MAX	250 OVR	R5 MAX	R10 MAX	R20 MAX	R20 OVR	ANGLE	ECCENT
A	±0.15	±0.2	±0.3	±0.5	±0.75	±0.2	±0.3	±0.5	±2.5	±3°	0.1
B	±0.2	±0.3	±0.55	±0.95	±1.4					±3°	0.1
Ⓒ	±0.3	±0.5	±0.8	±1.4	±2					±3°	0.15

ISSUE MARK

LET	DATE	REVISION RECORD	NO.	CHKD
	2007/02/05	NEW, A	C07-Z083	K.T

GENERAL TOLERANCE	10MAX	50MAX	100MAX	250MAX	2500VR	ANGLE	ECCENT
A	±0.15	±0.2	±0.3	±0.5	±0.75	±30'	0.1
B	±0.2	±0.3	±0.55	±0.95	±1.4	±30'	0.1
C	±0.3	±0.5	±0.8	±1.4	±2	±30'	0.15

SPECIFIED

MASS g

CUSTOMER

CUSTOMER PART NO.

CUSTOMER DWG NO.

OFFICE

TRIAL PART NO.

VENDOR

VENDOR NO.

DWG TYPE	DWG SOURCE	DWG DATE	UNIT	SCL	ANGLE
R	NEW	2007/02/02	mm	2:1	3

APPROVED	CHECKED	CHECKED	DESIGN	DRAWN
工藤	—	滝 #	N. OHASHI	M. MORAL
07.02.06		07.02.05	20005/09/14	2007/02/05

MATL. SPEC. SEE TABLE

TREAT. & FIN.

NAME HIGH CURRENT FUSE LINKS(大電流ヒューズ)

A1S 3P-TYPE ASSEMBLY 50A-30A-50A

PART NO. CH. CODE 7327-6167, A

DWG NO. 7327-6167:R

SET DWG NO.

YAZAKI CORPORATION