△1TABLE 1

SUB ASSEMBLY PART NO. AND CH. CODE	NO.	PART NO. AND CH. CODE	△2PART NAME	MATERIAL	COLOR	QTY.
△1 7287-5378-10 ETC.	①	△1SEE TABLE 2	RH TYPE 4P FEMALE HOUSING CODE C	PBT	△1SEE TABLE 2	1
	②	7158-5266	RH TYPE 4P FEMALE FRONT HOLDER	PBT	NATURAL	1
	③	7137-2815-80	RH TYPE 4P PACKING	SILICONE RUBBER	BROWN	1

△1TABLE 2

SUB ASSEMBLY PART NO. AND CH. CODE	PART NO. AND CH. CODE	COLOR
7287-5378-10	7187-5378-10	DARK GRAY
△1 7287-5378-80	7187-5378-80	BROWN

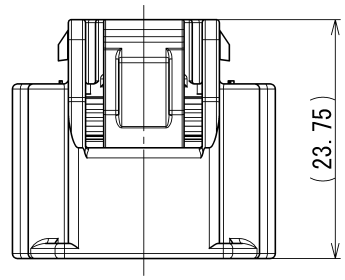

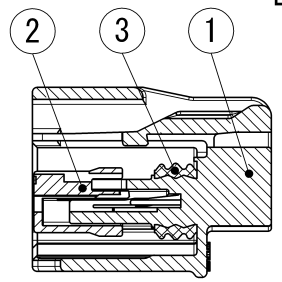

SEC. A-A

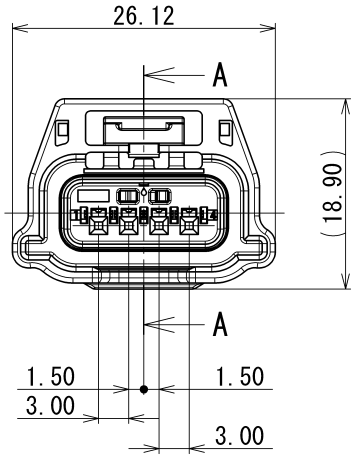

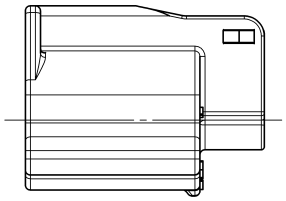

注記

△1 1. かん合相手品番 : 7286-5378-10, 7286-5378-80

2. 適用端子品番 : 7116-4415-02 ETC.

3. 適用ゴム栓品番 : 7158-3165-90, 7158-3166-60, 7158-3167-80, 7158-3168-80, 7158-3182-20

4. 適用防水栓品番 : 7158-3169-40

NOTES

△1 1. MATING PART NO. : 7286-5378-10, 7286-5378-80

2. APPLICABLE TERMINAL PART NO. : 7116-4415-02 ETC.

3. APPLICABLE WIRE SEAL PART NO. : 7158-3165-90, 7158-3166-60, 7158-3167-80, 7158-3168-80, 7158-3182-20

4. APPLICABLE SEALING PLUG PART NO. : 7158-3169-40

GENERAL TOLERANCE

	10 MAX	50 MAX	100 MAX	250 MAX	250 OVR	R5 MAX	R10 MAX	R20 MAX	R20 OVR	ANGLE	ECCENT
A	±0.15	±0.2	±0.3	±0.5	±0.75	±0.2	±0.3	±0.5	±2.5	±3°	0.1
B	±0.2	±0.3	±0.55	±0.95	±1.4					±3°	0.1
Ⓒ	±0.3	±0.5	±0.8	±1.4	±2					±3°	0.15

ISSUE MARK

LET	DATE	REVISION RECORD	NO.	CHKD
△2	2010/10/15	CHANGED PART NAME	C10-ZA61	G.M
△1	2009/08/03	ADDED PART NO., ETC.	C09-Z534	Y.F
	2009/06/02	NEW	C09-Z420	K.I

GENERAL TOLERANCE

	10MAX	50MAX	100MAX	250MAX	2500VR	ANGLE	ECCENT
A	±0.15	±0.2	±0.3	±0.5	±0.75	±30'	0.1
B	±0.2	±0.3	±0.55	±0.95	±1.4	±30'	0.1
C	±0.3	±0.5	±0.8	±1.4	±2	±30'	0.15

SPECIFIED

MASS

CUSTOMER

CUSTOMER PART NO. | CUSTOMER DWG NO.

OFFICE | TRIAL PART NO.

VENDOR

VENDOR NO.

DWG TYPE	DWG SOURCE	DWG DATE	UNIT	SCL	ANGLE
R	NEW	2009/06/03	mm	2:1	3

APPROVED	CHECKED	CHECKED	DESIGN	DRAWN
S.MIZUSE		R.CABANGAL	K.IKEYA	G.MAGNAYON
2010/10/15		2010/10/15	2009/04/17	2010/10/15

MATL. SPEC. △1SEE TABLE 1

TREAT. & FIN.

NAME △2 RH TYPE HOUSING 4P

SUB ASSEMBLY FEMALE CODE C

PART NO. CH. CODE △1 7287-5378-10 ETC.

DWG NO. 7287-5378-10:R

SET DWG NO.

YAZAKI CORPORATION