TABLE 1

SUB ASSEMBLY PART NO. AND CH. CODE	NO.	PART NO.	PART NAME	MATERIAL	COLOR	QTY.
△2 7287-3838-40 ETC.	①	△2 SEE TABLE 2	HOUSING	PBT	△2 SEE TABLE 2	1
	②	7158-5266	FRONT HOLDER	PBT	NATURAL	1
	③	7137-2815-80	PACKING	SILICONE RUBBER	BROWN	1

△2 TABLE 2

SUB ASSEMBLY PART NO. AND CH. CODE	PART NO.	COLOR	MATING PART NO.
7287-3838-40	7187-3838-40	LIGHT GRAY	7286-3838-40
7298-3655-30	7187-3838-30	BLACK	EQUIPMENT

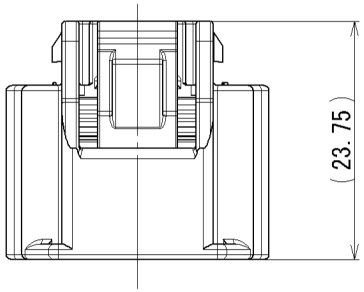

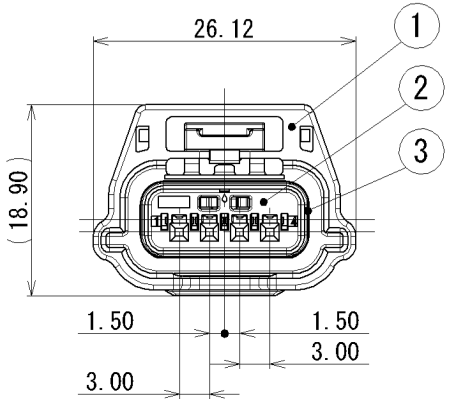

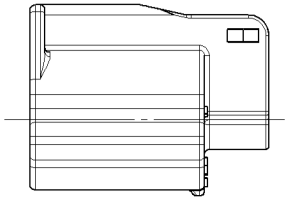

注記

△2 1. かん合相手品番 : 表2参照
2. 適用端子品番 : 7116-4415-02 ETC.
3. 適用ゴム栓品番 : 7158-3165-90、7158-3166-60、7158-3167-80
7158-3168-80、7158-3182-20
4. 適用防水栓品番 : 7158-3169-40

NOTES

△2 1. MATING PART NO. : SEE TABLE 2
2. APPLICABLE TERMINAL NO. : 7116-4415-02 ETC.
3. APPLICABLE RUBBER SEAL NO. : 7158-3165-90, 7158-3166-60, 7158-3167-80
7158-3168-80, 7158-3182-20
4. APPLICABLE RUBBER STOPPER NO. : 7158-3169-40

ISSUE MARK

LET	DATE	REVISION RECORD	NO.	CHKD
△2	2019/02/27	ADDED PART NO., ETC.	C19-P028	D.M
△1	2010/10/15	CHANGED PART NAME	C10-ZA61	G.M
	2008/10/14	NEW	C08-Z691	T.H

GENERAL TOLERANCE

	10MAX	50MAX	100MAX	250MAX	2500VR	ANGLE	ECCENT
A	±0.15	±0.2	±0.3	±0.5	±0.75	±30'	0.1
B	±0.2	±0.3	±0.55	±0.95	±1.4	±30'	0.1
Ⓒ	±0.3	±0.5	±0.8	±1.4	±2	±30'	0.15

SPECIFIED

MASS △2 (5.0) g

CUSTOMER
CUSTOMER PART NO. | CUSTOMER DWG NO.
OFFICE | TRIAL PART NO.
VENDOR
VENDOR NO.

DWG TYPE	DWG SOURCE	DWG DATE	UNIT	SCL	ANGLE
R	NEW	2008/10/14	mm	2:1	3

APPROVED	CHECKED	CHECKED	DESIGN	DRAWN
M. NAKAMURA	K. MATSUMURA	M. SUZUKI	K. IKEYA	D. MAI
2019/02/27	2019/02/27	2019/02/27	2008/08/29	2019/02/27

MATL. SPEC. SEE TABLE | TREAT. & FIN.

NAME △1 RH TYPE HOUSING 4P
SUB ASSEMBLY FEMALE CODE B

PART NO. CH. CODE △2 7287-3838-40 ETC.

DWG NO. 7287-3838-40:R | SET DWG NO.

YAZAKI CORPORATION