GENERAL TOLERANCE											
	10 MAX	50 MAX	100 MAX	250 MAX	250 OVR	R5 MAX	R10 MAX	R20 MAX	R20 OVR	ANGLE	ECCENT
A	±0.15	±0.2	±0.3	±0.5	±0.75	±0.2	±0.3	±0.5	±2.5	±3°	0.1
B	±0.2	±0.3	±0.55	±0.95	±1.4					±3°	0.1
Ⓒ	±0.3	±0.5	±0.8	±1.4	±2					±3°	0.15

TABLE 1

SUB ASSEMBLY PART NO. AND CH. CODE	NO.	PART NO. AND CH. CODE	PART NAME	MATERIAL	COLOR	QTY.
7287-1380-30ETC. SEE TABLE 2	①	7187-1380-30 ETC. SEE TABLE 2	HOUSING	PBT	SEE TABLE 2	1
	②	7172-0167	FRONT HOLDER	PBT-G	NATURAL	1
	③	7137-2849-80	PACKING	SILICONE RUBBER	BROWN	1

TABLE 2

SUB ASSEMBLY PART NO. AND CH. CODE	PART NO. AND CH. CODE	COLOR
7287-1380-30	7187-1380-30	BLACK
7287-1380	7187-1380	NATURAL
7287-1380-10	7187-1380-10	DARK GRAY
7287-1380-40	7187-1380-40	LIGHT GRAY

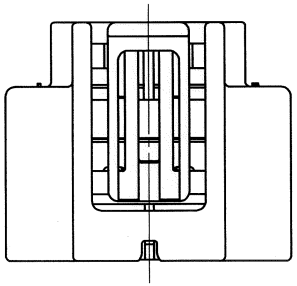

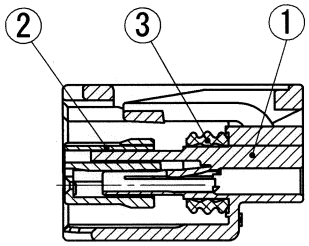

SEC. A-A

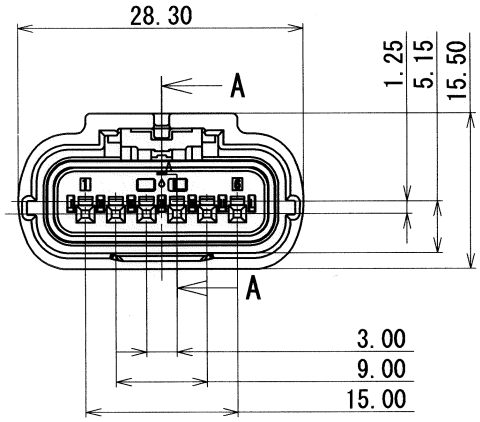

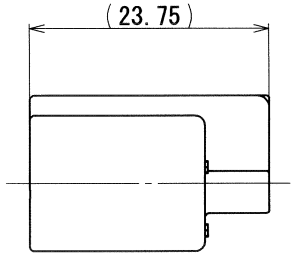

NOTES

1. APPLICABLE TERMINAL NO. : 7116-4415-02, 7116-4416-02, 7116-4417-02.
2. APPLICABLE SEAL RUBBER NO. : 7158-3165-90, 7158-3166-60, 7158-3167-80, 7158-3168-80.
3. APPLICABLE UNUSED CAVITY PLUG: 7158-3169-40.

注記

1. 適用端子品番 : 7116-4415-02, 7116-4416-02, 7116-4417-02
2. 適用ゴム栓品番 : 7158-3165-90, 7158-3166-60, 7158-3167-80
   7158-3168-80
3. 適用防水栓品番 : 7158-3169-40

ISSUE MARK

LET	DATE	REVISION RECORD	NO.	CHKD
	2007/02/13	NEW	C07-Z101	K.N

GENERAL TOLERANCE	10MAX	50MAX	100MAX	250MAX	2500VR	ANGLE	ECCENT
A	±0.15	±0.2	±0.3	±0.5	±0.75	±30'	0.1
B	±0.2	±0.3	±0.55	±0.95	±1.4	±30'	0.1
C	±0.3	±0.5	±0.8	±1.4	±2	±30'	0.15

SPECIFIED

MASS g

CUSTOMER	
CUSTOMER PART NO.	CUSTOMER DWG NO.
OFFICE	TRIAL PART NO.
VENDOR	
VENDOR NO.	

DWG TYPE	DWG SOURCE	DWG DATE	UNIT	SCL	ANGLE
R	NEW	2007/02/13	mm	2:1	3

APPROVED	CHECKED	CHECKED	DESIGN	DRAWN
高 07.02.13		新穂 2007.02.14	K.NIIHO 2007/01/25	S.SANTOS 2007/02/13

MATL. SPEC. SEE TABLE

TREAT. & FIN.

NAME HS025 6P SEALED CONNECTOR
SUB ASSEMBLY FEMALE (1ROW)

PART NO. CH. CODE 7287-1380-30 ETC.

DWG NO. 7287-1380-30:R

SET DWG NO.

YAZAKI CORPORATION