TABLE 1	SUB-ASSEMBLY PART NUMBER	NO.	PART NUMBER	PART NAME	MATERIAL	COLOR	QUANTITY
	3 SEE TABLE 2	1	SEE TABLE 2	48P [40P-1.2 + YESC KAIZEN (6P-2.8 + 2P-6.3)] UNSEALED MALE CONNECTOR HOUSING	PBT-GF15	BLACK	1
		2	7172-0744	48P [40P-1.2 + YESC KAIZEN (6P-2.8 + 2P-6.3)] UNSEALED MALE CONNECTOR TPA	PBT-GF15	NATURAL	1
		3	7172-0743	48P [40P-1.2 + YESC KAIZEN (6P-2.8 + 2P-6.3)] UNSEALED CONNECTOR ISL	PPA-GF35	NATURAL	2

TABLE 2	SUB-ASSEMBLY PART NUMBER	HOUSING PART NUMBER	CLIP SLOT	3 MASS (g)	3 PART AVAILABILITY
	7286-9414-30	7186-9414-30	Y	(40.65)	NOT TOOLED
	7288-0875-30	7188-0875-30	N	(38.90)	AVAILABLE

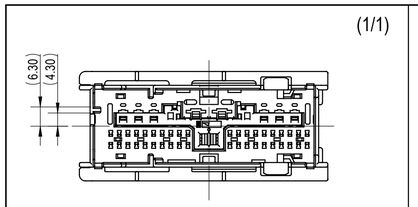

3 KEYWAY A

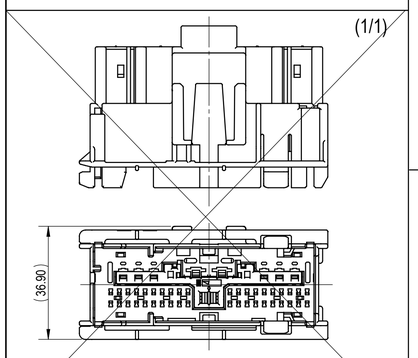

CLIP SLOT VERSION
PART NUMBER: 7286-9414-30
PART NOT TOOLED

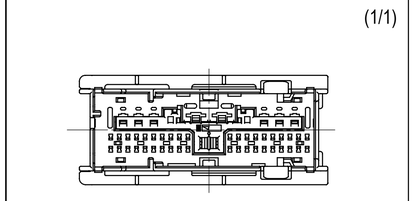

NO CLIP SLOT VERSION
PART NUMBER: 7288-0875-30
(SHOWN IN MAIN VIEWS)

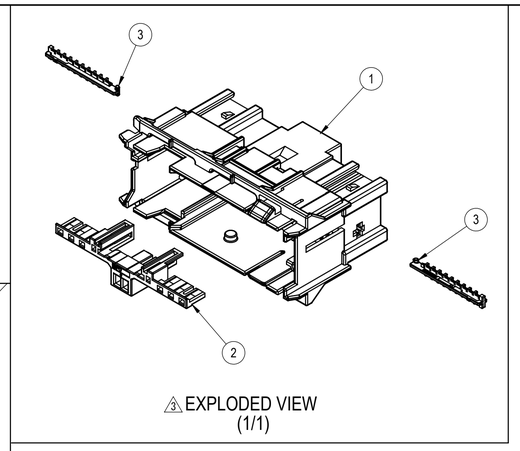

3 EXPLODED VIEW
(1/1)

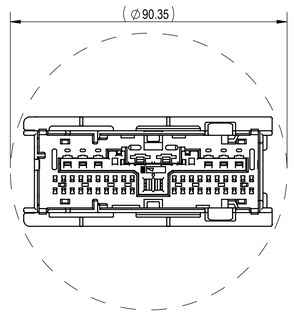

3 RECOMMENDED PASS-THROUGH HOLE DIMENSION
(1mm CLEARANCE ALL AROUND)
(1/1)

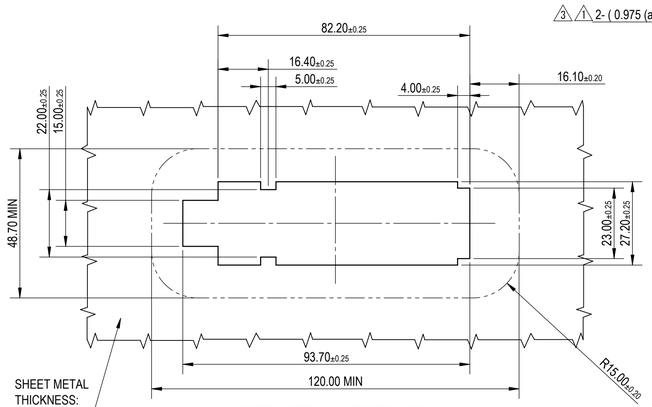

SHEET METAL INTERFACE
(1/1)

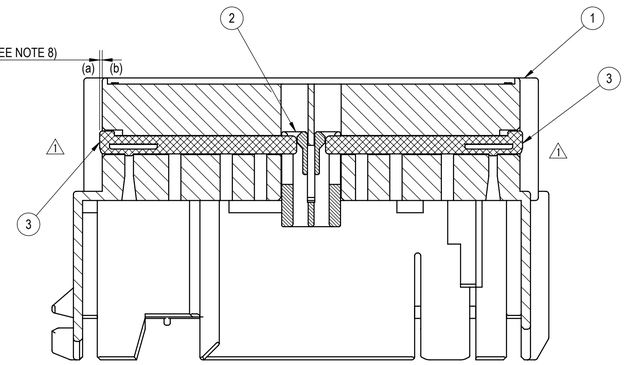

SECTION B-B

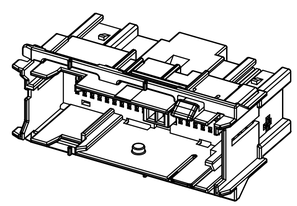

FRONT ISOMETRIC VIEW
(1/1)

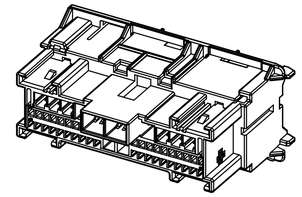

3 REAR ISOMETRIC VIEW
(1/1)

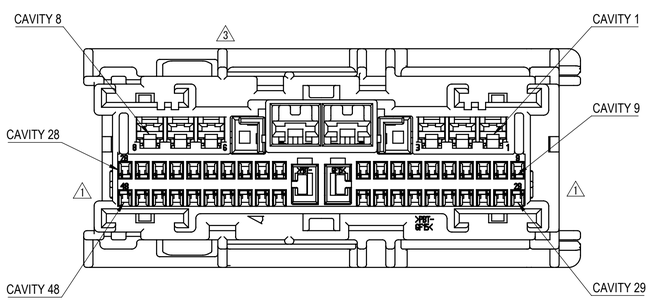

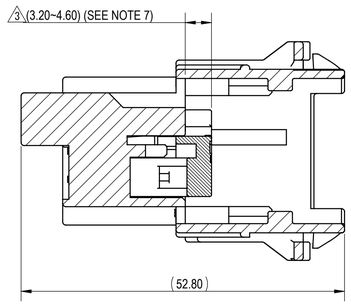

SECTION A-A

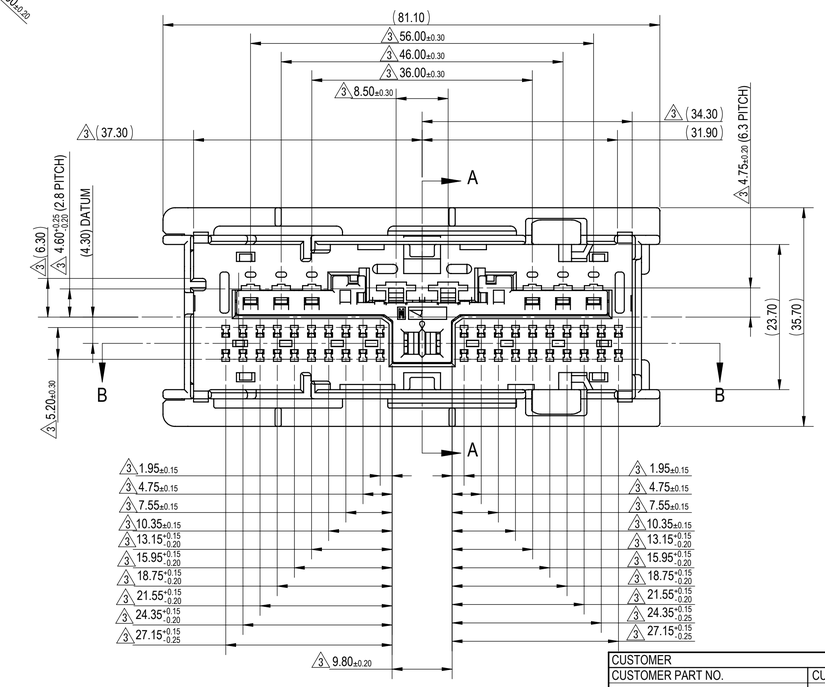

3 NOTES:

1. PARTS MUST BE PURCHASED FROM YAZAKI.
2. PARTS MUST BE FREE OF FLASH AND IMPERFECTIONS THAT AFFECT FUNCTION.
3. APPLICABLE TERMINAL: SEE 10322345-1 DRAWING (1.2mm MLK KOSTAL UNSEALED) (CAVITIES 9-48) OR
   SEE C-1418754 DRAWING (1.2mm MCON TYCO UNSEALED) (CAVITIES 9-48)
   MAX WIRE OD: 1.90mm
   SEE 7114-4110-02:R DRAWING (2.8mm YESC UNSEALED) (CAVITIES 1-3,6-8)
   MAX WIRE OD: 3.70mm
   SEE 7114-4120-02:R DRAWING (6.3mm YESC UNSEALED) (CAVITIES 4,5)
   MAX WIRE OD: 4.90mm
4. MATING PART NUMBER: 7289-4224-30 (SEE 7289-4224-30:R FOR WIRE SHIELD REQUIREMENT)
5. PART SATISFIES GMW 3191 DECEMBER 2007, (T2/V1/S1/MF2) WITH THE FOLLOWING EXCEPTIONS:
   TERMINAL-FROM CONNECTOR EXTRACTION FORCE W/O TPA: 47N MIN. (TYCO 1.2)
   TPA ENGAGE FORCE (SINGLE IMPROPERLY-ASSEMBLED TERMINAL)= 50N MIN. (TYCO 1.2)
   TPA DISENGAGE FORCE / CLOSED TPA LOCKING FORCE= 20-49N
6. PART TO COMPLY WITH YPES-31-038 REQUIREMENTS.
7. THIS DIMENSION SHOWS THE PRE-SET POSITION OF THE TPA.
8. THIS DIMENSION SHOWS THE PRE-SET POSITION OF THE ISL.
9. THIS DRAWING IS TO BE USED FOR INTERNAL YAZAKI PSW SUBMISSION.
10. CLIP SLOT: 23mm CLIP SLOT. (BASED ON USCAR 23mm CLIP SLOT, EWCAP-005-23, REV C)
11. HANDLING MANUAL NUMBER: YPES-15-1377E.
12. CONNECTOR IS CAPABLE OF ACCEPTING A DRESS COVER.

LET	DATE	REVISION RECORD	NO.	CHKD
3	01-09-2018	ADDED VIEWS,CORRECTED VIEW, ADDED COLUMNS, ADDED TOLERANCES, CHANGED MATING PART.	C18-A017	I.M.
2	08-29-2014	CHANGED TOLERANCE	C14-A637	M.T.
1	10-25-2013	CHANGED FORM OF ISL	C13-A571	I.Z.
-	07-24-2013	NEW	C13-A368	V.L.

GENERAL TOLERANCE

	10MAX	50MAX	100MAX	250MAX	250OVR	R5 MAX	R10 MAX	R20 MAX	R20 OVR	ANGLE	ECCENT
A	±0.15	±0.20	±0.30	±0.50	±0.75	±0.20	±0.30	±0.50	±2.50	±3°	0.1
B	±0.20	±0.30	±0.55	±0.95	±1.40					±3°	0.1
C	±0.30	±0.50	±0.80	±1.40	±2.00					±3°	0.15

SPECIFIED

MASS SEE TABLE 2

CUSTOMER	
CUSTOMER PART NO.	CUSTOMER DWG NO.
OFFICE YNA	TRIAL PART NO.
VENDOR	
VENDOR NO.	

DWG TYPE	DWG SOURCE	DWG DATE	UNIT	SCL	ANGLE
R	7286-9414-30:M 3	07-24-2013	mm	2/1	3

APPROVED	CHECKED	CHECKED	DESIGN	DRAWN
Justin Gerwatowski	James Littek 2018.05.15 13:11:57 - 04'00'		JAMES LITTEK 05-14-2012	ISABEL MUNIZ 05-15-2018

MATL. SPEC. SEE TABLE | TREAT. & FIN. N/A

NAME 48P [40P-1.2 + YESC KAIZEN (6P-2.8 + 2P-6.3)]
UNSEALED MALE CONNECTOR SUB-ASSEMBLY

PART NO. / CH. CODE 7286-9414-30, ETC.

DWG NO. 7286-9414-30:R

YAZAKI CORPORATION

ISSUE MARK