GENERAL TOLERANCE											
	10 MAX	50 MAX	100 MAX	250 MAX	250 OVR	R5 MAX	R10 MAX	R20 MAX	R20 OVR	ANGLE	ECCENT
A	±0.15	±0.2	±0.3	±0.5	±0.75	±0.2	±0.3	±0.5	±2.5	±3°	0.1
B	±0.2	±0.3	±0.55	±0.95	±1.4					±3°	0.1
C	±0.3	±0.5	±0.8	±1.4	±2					±3°	0.15

SUB ASSEMBLY PART NO. AND CH. CODE	NO.	PART NO. AND CH. CODE	△2 PART NAME	MATERIAL	COLOR	QTY.
△1 7283-9332-30, A	①	7183-9332-30	1.5(060) 6P SEALED HOUSING FEMALE	PBT	BLACK	1
	②	7137-2098-80	1.5(060) 6P SEALED PACKING	SILICONE RUBBER	RED IRON	1

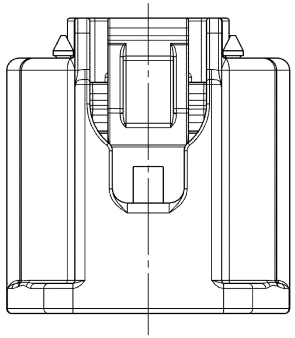

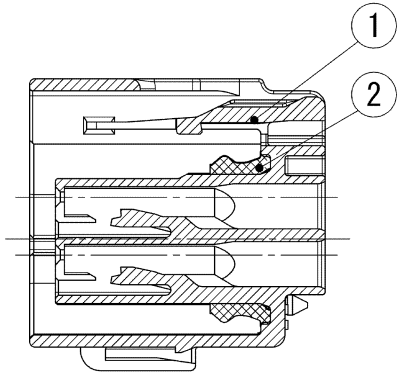

SEC. A-A

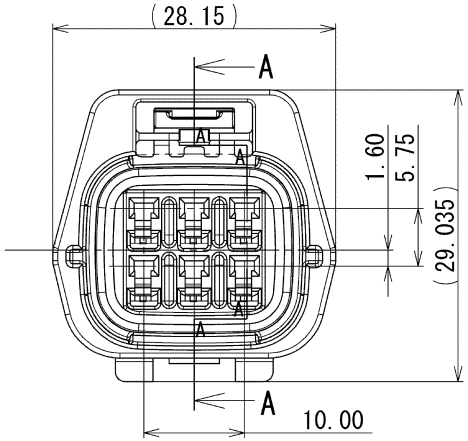

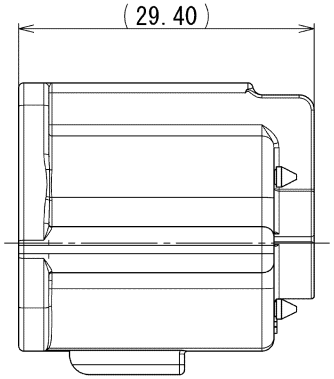

注記

1. かん合相手品番 : 7182-9331-30
2. 適用端子品番 : 7116-4102-02(CAVS 0.3～CAVS 0.5)
   7116-4103-02(CAVS 0.85～CAVS 1.25)
3. 適用ゴム栓品番 : 7158-3003-90(CAVS 0.3～CAVS 0.5)
   7158-3004-40(CAVS 0.85～CAVS 1.25)
4. 適用空栓品番 : 7158-3198-90
5. 適用CAP品番 : 7134-8260-30

NOTES

1. MATING PART NO. : 7182-9331-30
2. APPLICABLE TERMINAL NO. : 7116-4102-02(CAVS 0.3～CAVS 0.5)
   7116-4103-02(CAVS 0.85～CAVS 1.25)
3. APPLICABLE RUBBER STOPPER NO. : 7158-3003-90(CAVS 0.3～CAVS 0.5)
   7158-3004-40(CAVS 0.85～CAVS 1.25)
4. APPLICABLE DUMMY PLUG NO. : 7158-3198-90
5. APPLICABLE CAP PART NO. : 7134-8260-30

ISSUE MARK

LET	DATE	REVISION RECORD	NO.	CHKD
△2	10.10.15	CHANGED PART NAME	C10-ZA71	R.E
△1	10.01.12	ADDED PART NAME, ETC., A	C09-Z542	H.S
	04.11.02	NEW	C04-ZD11	M.M

GENERAL TOLERANCE							
	10MAX	50MAX	100MAX	250MAX	250OVR	ANGLE	ECCENT
A	±0.15	±0.2	±0.3	±0.5	±0.75	±30'	0.1
B	±0.2	±0.3	±0.55	±0.95	±1.4	±30'	0.1
C	±0.3	±0.5	±0.8	±1.4	±2	±30'	0.15

SPECIFIED

MASS

CUSTOMER

CUSTOMER PART NO. | CUSTOMER DWG NO.

OFFICE | TRIAL PART NO.

VENDOR

VENDOR NO.

DWG TYPE	DWG SOURCE	DWG DATE	UNIT	SCL	ANGLE
R	NEW	04.11.02	mm	2:1	3

APPROVED	CHECKED	CHECKED	DESIGN	DRAWN
S.MIZUSE		R.CABANGAL	K.SUZUKI	R.ESPITAL
10.10.15		10.10.15	04.04.26	10.10.15

MATL. SPEC. SEE TABLE

TREAT. & FIN.

NAME △2 1.5(060) 6P SEALED HOUSING FEMALE SUB ASSEMBLY

PART NO. CH. CODE △1 7283-9332-30, A

DWG NO. 7283-9332-30:R

SET DWG NO.

YAZAKI CORPORATION