GENERAL TOLERANCE											
	10 MAX	50 MAX	100 MAX	250 MAX	250 OVR	R5 MAX	R10 MAX	R20 MAX	R20 OVR	ANGLE	ECCENT
A	±0.15	±0.2	±0.3	±0.5	±0.75	±0.2	±0.3	±0.5	±2.5	±3°	0.1
B	±0.2	±0.3	±0.55	±0.95	±1.4					±3°	0.1
C	±0.3	±0.5	±0.8	±1.4	±2					±3°	0.15

SUB ASSEMBLY PART NO. AND CH. CODE	NO.	PART NO. AND CH. CODE	MATERIAL	COLOR	QTY.
△1 7283-9088-30, A	①	7183-9082-30	PBT-G	BLACK	1
	②	7158-6611	PBT-G	NATURAL	1

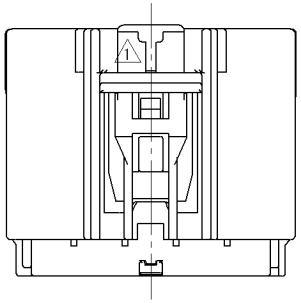

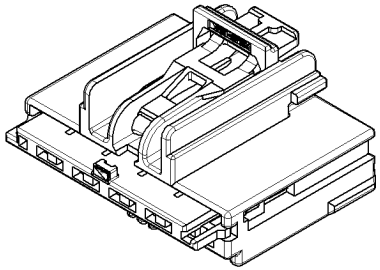

注記

1. かん合相手品番 : USCAR 064-U-010-1-Z03
2. 適応端子品番 : 7116-4618-02 ETC.

NOTES

1. MATING PART NO. : USCAR 064-U-010-1-Z03
2. APPLICABLE TERMINAL NO. : 7116-4618-02 ETC.

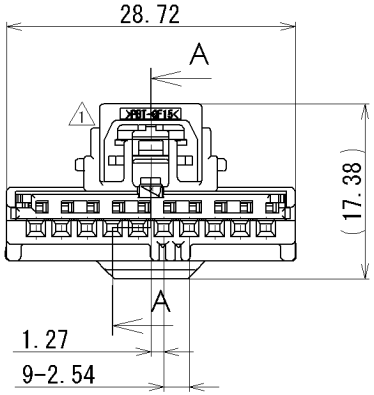

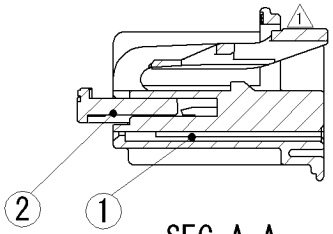

SEC. A-A

ISSUE MARK

LET	DATE	REVISION RECORD	NO.	CHKD
△2	10/10/15	CHANGED PART NAME	C10-ZA71	R.E
△1	06/10/04	CHANGED FORM, A	C06-Z896	T.Y
	04/09/03	NEW	C04-ZB27	T.M

GENERAL TOLERANCE							
	10MAX	50MAX	100MAX	250MAX	250OVR	ANGLE	ECCENT
A	±0.15	±0.2	±0.3	±0.5	±0.75	±30'	0.1
B	±0.2	±0.3	±0.55	±0.95	±1.4	±30'	0.1
C	±0.3	±0.5	±0.8	±1.4	±2	±30'	0.15

SPECIFIED

MASS g

CUSTOMER					
CUSTOMER PART NO.		CUSTOMER DWG NO.			
OFFICE		TRIAL PART NO.			
VENDOR					
VENDOR NO.					
DWG TYPE	DWG SOURCE	DWG DATE	UNIT	SCL	ANGLE
R	NEW	04/09/03	mm	2:1	3
APPROVED	CHECKED	CHECKED	DESIGN	DRAWN	
S.MIZUSE	———	R.CABANGAL	T.MIYAKAWA	R.ESPITAL	
10/10/15	———	10/10/15	03/12/15	10/10/15	

MATL. SPEC. SEE TABLE

TREAT. & FIN.

NAME △2 KAIZEN 0.64 SYSTEM UNSEALED HOUSING

10P FEMALE 1ROW TYPE SUB ASSEMBLY

PART NO. CH. CODE 7283-9088-30, A

DWG NO. 7283-9088-30:R

SET DWG NO.

YAZAKI CORPORATION