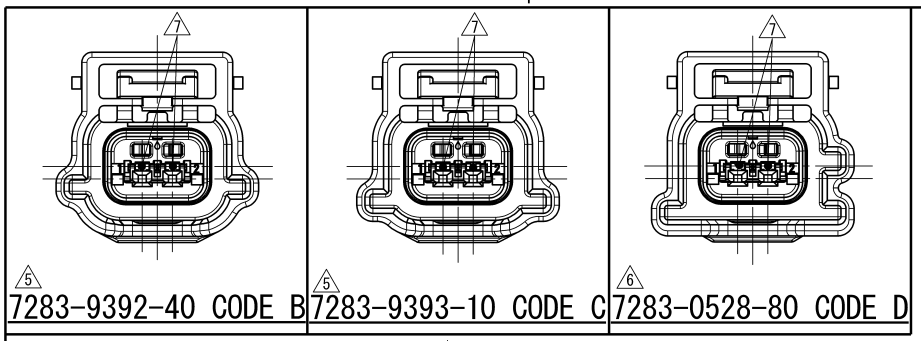

TABLE 1

SUB ASSEMBLY PART NO. AND CH. CODE	NO.	PART NO. AND CH. CODE	PART NAME	MATERIAL	COLOR	QTY.
7283-8851-30 ETC.	①	SEE TABLE 2	HOUSING	PBT	SEE TABLE 2	1
	②	7158-5262	FRONT HOLDER	PBT	NATURAL	1
	③	7137-2813-80	PACKING	SILICONE RUBBER	BROWN	1

TABLE 2

SUB ASSEMBLY PART NO. AND CH. CODE	PART NO. AND CH. CODE	COLOR	MATING PART NO.
7283-8851-30, D	7183-8851-30	BLACK	7282-8851-30
7283-9392-40, A	7183-9392-40	LIGHT GRAY	7282-9392-40
7283-9393-10, A	7183-9393-10	DARK GRAY	7282-9393-10
7283-0528-80, A	7183-0528-80	BROWN	7282-0528-80

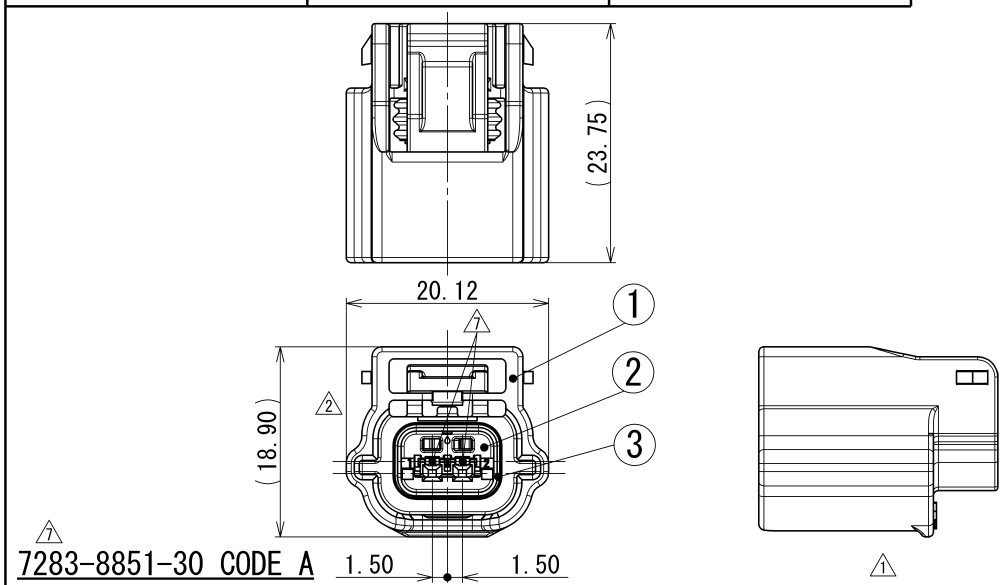

注記

1. 適用端子品番 : 7116-4415-02 ETC.
2. 適用ｺﾞﾑ栓品番 : 7158-3165-90, 7158-3166-60, 7158-3182-20
   7158-3167-80, 7158-3168-80
3. 適用防水栓品番 : 7158-3169-40

NOTES

1. APPLICABLE TERMINAL NO. : 7116-4415-02 ETC.
2. APPLICABLE SEAL RUBBER NO. : 7158-3165-90, 7158-3166-60, 7158-3182-20
   7158-3167-80, 7158-3168-80
3. APPLICABLE UNUSED CAVITY PLUG: 7158-3169-40

LET	DATE	REVISION RECORD	NO.	CHKD
8	10/11/15	CHANGED PART NAME	C10-ZA90	G.M
7	06/10/12	CHANGED FORM, ETC. D	C06-Z201	Y.I
6	05/09/08	ADDED PART NO., CODE D	C05-ZC78	T.M
5	05/04/14	ADDED PART NO., CODE B, C	C05-Z549	S.K
4	04/06/17	CHANGED CODE, C	C04-Z633	H.Y
3	03/08/07	CHANGED CODE, B	C03-X324	T.Y
2	02/05/17	CHANGED FORM, A	C02-X538	T.Y
1	02/02/06	ELIMINATE SECTION	C02-X199	T.Y
	01/11/08	NEW	C01-Y135	T.Y

ISSUE MARK

GENERAL TOLERANCE

	10MAX	50MAX	100MAX	250MAX	2500VR	ANGLE	ECCENT
A	±0.15	±0.2	±0.3	±0.5	±0.75	±30'	0.1
B	±0.2	±0.3	±0.55	±0.95	±1.4	±30'	0.1
C	±0.3	±0.5	±0.8	±1.4	±2	±30'	0.15

SPECIFIED

MASS

CUSTOMER					
CUSTOMER PART NO.		CUSTOMER DWG NO.			
OFFICE		TRIAL PART NO.			
VENDOR					
VENDOR NO.					
DWG TYPE	DWG SOURCE	DWG DATE	UNIT	SCL	ANGLE
R	NEW	01/11/08	mm	2:1	3
APPROVED	CHECKED	CHECKED	DESIGN	DRAWN	
S.MIZUSE		R.CABANGAL	M.KASHIYAMA	G.MAGNAYON	
10/11/15		10/11/15	01/05/08	10/11/15	

MATL. SPEC. SEE TABLE

TREAT. & FIN.

NAME RH TYPE HOUSING 2P
SUB ASSEMBLY FEMALE

PART NO. CH. CODE 7283-8851-30 ETC.

DWG NO. 7283-8851-30:R

SET DWG NO.

YAZAKI CORPORATION