TABLE 1

SUB ASSEMBLY PART NO. AND CH. CODE	NO.	PART NO. AND CH. CODE	MATERIAL	COLOR	QTY.
7283-8559-30 ETC.	①	SEE TABLE 2	PBT	SEE TABLE 2	1
	②	7137-2714-50	SILICONE RUBBER	RED	1

TABLE 2

SUB ASSEMBLY PART NO. AND CH. CODE	PART NO. AND CH. CODE	COLOR
7283-8558-10	7183-8558-10	DARK GRAY
7283-8559-30	7183-8559-30	BLACK

注記

1. 嵌合相手品番 : 7182-8559-30 ETC.
2. 適用端子品番 : 7116-4102-02 ETC.

NOTES

1. MATING PART NO. : 7182-8559-30 ETC.
2. APPLICABLE TERMINAL NO. : 7116-4102-02 ETC.

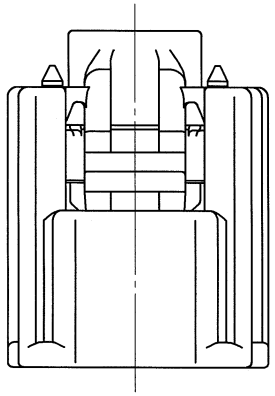

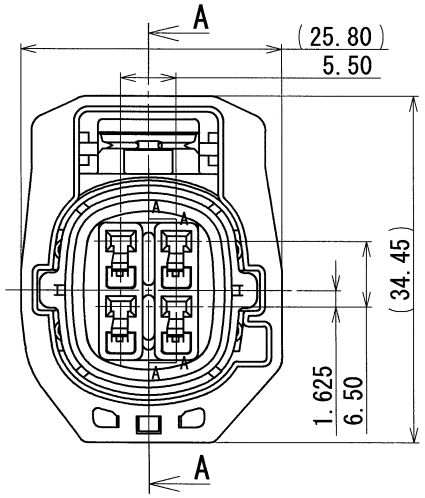

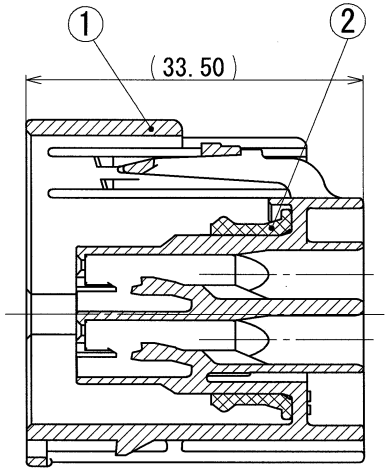

SEC. A-A

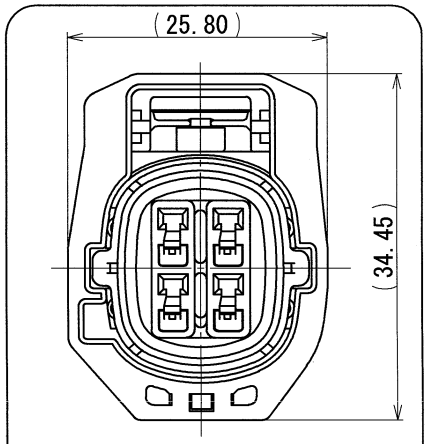

7283-8558-10 (TYPE A)

GENERAL TOLERANCE	10 MAX	50 MAX	100 MAX	250 MAX	250 OVR	R5 MAX	R10 MAX	R20 MAX	R20 OVR	ANGLE	ECCENT
A	±0.15	±0.2	±0.3	±0.5	±0.75	±0.2	±0.3	±0.5	±2.5	±3°	0.1
B	±0.2	±0.3	±0.55	±0.95	±1.4					±3°	0.1
C	±0.3	±0.5	±0.8	±1.4	±2					±3°	0.15

LET	DATE	REVISION RECORD	NO.	CHKD
	02/10/31	NEW	C02-Y295	K.Y

GENERAL TOLERANCE	10MAX	50MAX	100MAX	250MAX	250OVR	ANGLE	ECCENT
A	±0.15	±0.2	±0.3	±0.5	±0.75	±30'	0.1
B	±0.2	±0.3	±0.55	±0.95	±1.4	±30'	0.1
C	±0.3	±0.5	±0.8	±1.4	±2	±30'	0.15

SPECIFIED MASS g

ISSUE MARK

CUSTOMER			
CUSTOMER PART NO.		CUSTOMER DWG NO.	
OFFICE		TRIAL PART NO.	
VENDOR			
VENDOR NO.			

DWG TYPE	DWG SOURCE	DWG DATE	UNIT	SCL	ANGLE
R	NEW	02/10/31	mm	2:1	3

APPROVED	CHECKED	CHECKED	DESIGN	DRAWN
杉山(恵)	—	吉田	K.YOSHIDA	Y.IMAI
'02.11.07	—	02.11.05	02/03/14	02/10/31

MATL. SPEC. SEE TABLE 1 | TREAT. & FIN.

NAME 060 4P SEALED CONNECTOR HOUSING FEMALE (TYPE B) SUB ASSEMBLY

PART NO. CH. CODE 7283-8559-30 ETC.

DWG NO. 7283-8559-30:R | SET DWG NO.

YAZAKI CORPORATION