TABLE 1

SUB ASSEMBLY PART NO.	NO.	PART NO.	MATERIAL	COLOR	QTY.
7283-7064 ETC.	1	SEE TABLE 2	PBT	SEE TABLE 2	1
	2	7157-4565	PBT	NATURAL	1
	3	△2 7137-2219-60	△2 SILICONE RUBBER	△2 LIGHT GREEN	1

TABLE 2

SUB ASSEMBLY PART NO.	PART NO.	COLOR
7283-7064, G	7183-7064	NATURAL
7283-7064-10, G	7183-7064-10	DARK GRAY
7283-7064-30, G	7183-7064-30	BLACK
7283-7064-40, G	7183-7064-40	LIGHT GRAY
7283-7064-50, G	7183-7064-50	ORANGE
△2 7283-7064-51, G	7183-7064-51	SAE ORANGE
7283-7064-60, G	7183-7064-60	GREEN
7283-7064-80, G	7183-7064-80	BROWN
7283-7064-90, G	7183-7064-90	BLUE

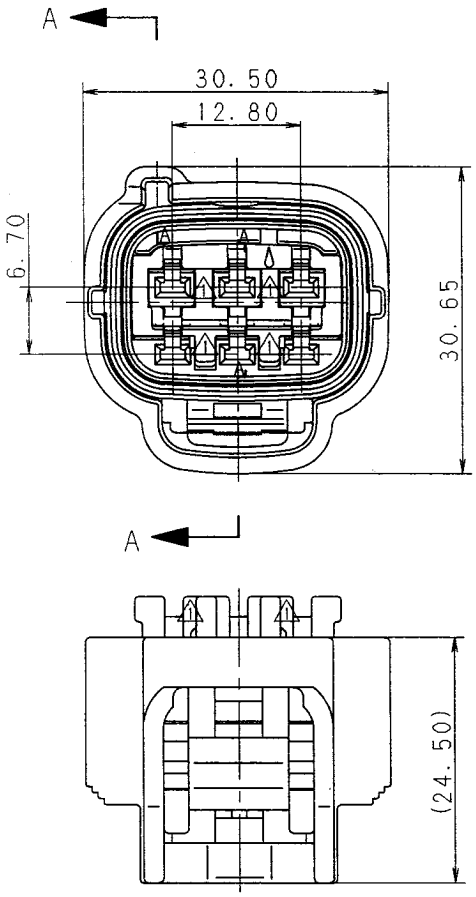

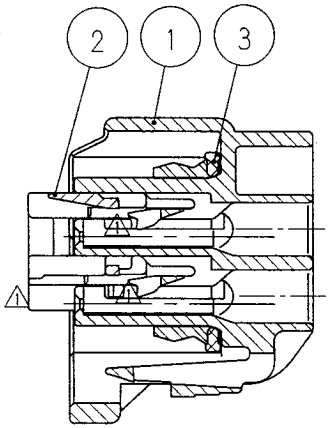

SEC. A-A

注 記

1. 嵌合相手品番 : 7282-7064 ETC.
2. 適用端子品番 : 7116-4025 ETC.
△1 3. 適用ゴム栓品番 : 7158-3006-90 ETC.

NOTES

1. MATING PART NO. : 7282-7064 ETC.
2. APPLICABLE TERMINAL NO. : 7116-4025 ETC.
△1 3. APPLICABLE RUBBER STOPPER NO. : 7158-3006-90 ETC.

LET	DATE	REVISION RECORD	NO.	CHKD
△2	98.03.19	ADDED PART NO., CHANGED MATERIAL & PART NO., G	C98-L445	H. T
△1	97.07.02	CHANGED FORM & ADDED NOTE. A	C97-M317	H. K
	92.07.01	NEW	C92-L508	T. T

GENERAL TOLERANCE

	10MAX	50MAX	100MAX	250MAX	2500VR	ANGLE	ECCENT
A	±0.15	±0.2	±0.3	±0.5	±0.75	±30′	0.1
B	±0.2	±0.3	±0.55	±0.95	±1.4	±30′	0.1
C	±0.3	±0.5	±0.8	±1.4	±2	±30′	0.15

SPECIFIED

MASS g

CUSTOMER

CUSTOMER PART NO. | CUSTOMER DWG NO.

OFFICE | TRIAL PART NO.

VENDOR

VENDOR NO.

DWG TYPE	DWG SOURCE	DWG DATE	UNIT	SCL	ANGLE
R	NEW	92.07.01	mm	2/1	3

APPROVED	CHECKED	CHECKED	DESIGN	DRAWN
加藤	川梨	福田	KODAMA	AOYAMA
98.3.25	98.03.24	98.03.24	92.03.04	98.03.19

MATL. SPEC. SEE TABLE 1 | TREAT. & FIN.

NAME 090Ⅱ 6P SEALED CONNECTOR HOUSING FEMALE SUB ASSEMBLY

PART NO. / CH. CODE 7283-7064 ETC.

DWG NO. 7283-7064 : R | SET DWG NO.

YAZAKI CORPORATION

ISSUE MARK