TABLE 1

SUB ASSEMBLY PART NO. AND CH. CODE	NO.	PART NO. AND CH. CODE	④ PART NAME	MATERIAL	COLOR	① QTY.
①7283-7028-30 ETC.	①	①SEE TABLE 2	HOUSING	PBT	①SEE TABLE 2	1
	②	7157-4350	SPACER	PBT	NATURAL	1
	③	②7137-2244-60	PACKING	②SILICONE RUBBER	②LIGHT GREEN	1

①TABLE 2

	SUB ASSEMBLY PART NO. AND CH. CODE	PART NO. AND CH. CODE	COLOR
①	7283-7028,Ⓐ	7183-7028	NATURAL
①	7283-7028-10,Ⓐ	7183-7028-10	DARK GRAY
	7283-7028-30,Ⓐ	7183-7028-30	BLACK
①	7283-7028-40,Ⓐ	7183-7028-40	LIGHT GRAY
①	7283-7028-50,Ⓐ	7183-7028-50	ORANGE
①	7283-7028-60,Ⓐ	7183-7028-60	GREEN
①	7283-7028-80,Ⓐ	7183-7028-80	BROWN
①	7283-7028-90,Ⓐ	7183-7028-90	BLUE

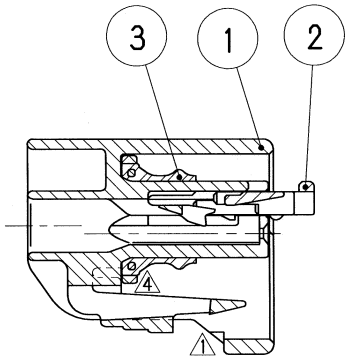

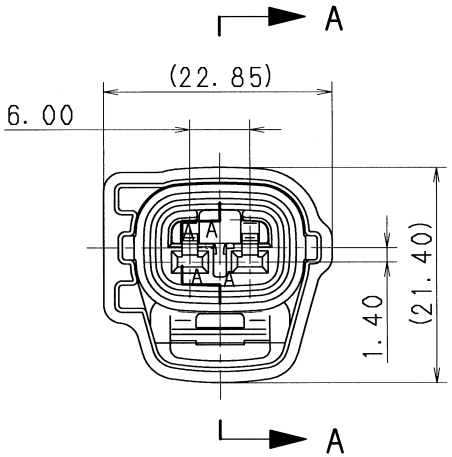

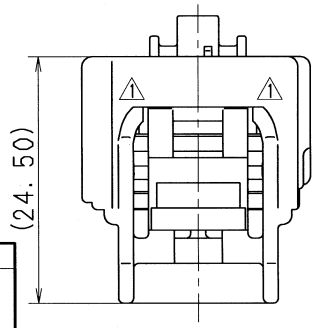

NOTES

1. MATING PART NO. :7282-7028-30 ETC.
2. APPLICABLE TERMINAL NO. :7116-4025 ETC.
3. ③ APPLICABLE RUBBER STOPPER NO. :7158-3006-90 ETC.

注 記

1. かん合相手品番:7282-7028-30 ETC.
2. 適用ターミナル品番:7116-4025 ETC.
3. ③ 適用ゴム栓品番:7158-3006-90 ETC.

LET	DATE	REVISION RECORD	NO.	CHKD
④	07.08.03	CHANGED FORM, ETC.	C07-Z830	K.S
③	03.04.14	CHANGED NAME & CORRECTION OF A CLERICAL ERROR	C03-X273	K.O
②	98.01.13	CHANGED MATERIAL, NOTES & PART NO.,Ⓐ	C97-N786	A.A
①	96.10.22	CHANGED FORM & ADDED PART NO.	C96-M949	M.T
	89.09.13	NEW	C89-L966	M.T

GENERAL TOLERANCE

	10MAX	50MAX	100MAX	250MAX	2500VR	ANGLE	ECCENT
A	±0.15	±0.2	±0.3	±0.5	±0.75	±30′	0.1
B	±0.2	±0.3	±0.55	±0.95	±1.4	±30′	0.1
Ⓒ	±0.3	±0.5	±0.8	±1.4	±2	±30′	0.15

SPECIFIED

MASS g

ISSUE MARK

CUSTOMER

CUSTOMER PART NO. | CUSTOMER DWG NO.

OFFICE | TRIAL PART NO.

VENDOR

VENDOR NO.

DWG TYPE	DWG SOURCE	DWG DATE	UNIT	SCL	ANGLE
R	NEW	89.09.19	mm	①2/1	3

APPROVED	CHECKED	CHECKED	DESIGN	DRAWN
山梨	兒玉	佐藤	SAMEJIMA	M. MORAL
'07-08-03	'07.08.03	07.08.03	89.06.21	07.08.03

MATL. SPEC. SEE TABLE 1 | TREAT. & FIN.

NAME ④2.3Ⅱ 2P SEALED CONNECTOR

HOUSING FEMALE SUB ASSEMBLY

PART NO. CH. CODE ①7283-7028-30 ETC.

DWG NO. 7283-7028-30:R | SET DWG NO.

YAZAKI CORPORATION