© COPYRIGHT. THIS DRAWING HAS COPYRIGHT AND MAY NOT BE COPIED IN WHOLE OR IN PART OR USED FOR ANY PURPOSE OTHER THAN FOR WHICH IT IS SUPPLIED WITHOUT EXPRESS WRITTEN CONSENT OF YAZAKI EUROPE LIMITED.

CODING OVERVIEW
(SCALE 2:1)

TYPE A

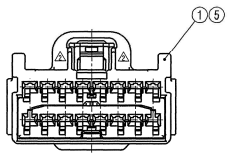

7283-6453-60

△ 7283-6453-70 △(7C03-6453-70)

TYPE B

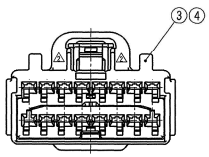

7283-6456-90

△7283-6456-80

TYPE C

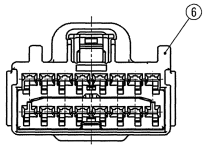

△7283-3585-40

TYPE D

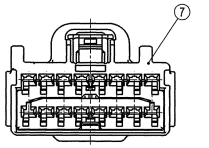

△ 7289-9097

	SUB ASSEMBLY PART NO.	NO.	PART NO.	PART NAME	MATERIAL	COLOR	QTY.	MATING PART NO.	TYPE
	7283-6453-60	1	7183-6453-60	YESC KAIZEN 1.5 SYSTEM CONNECTOR 16P (F) HOUSING (TYPE A)	PBT GF15	GREEN	1	7182-4073-60	SPACERLESS
								7282-5534-60	YESC
		2	7158-5979	YESC KAIZEN 1.5 SYSTEM CONNECTOR 16P (F) FRONT HOLDER	PBT H01	NATURAL	1	7282-6453-60	YESC KAIZEN
	7283-6456-90	3	7183-6456-90	YESC KAIZEN 1.5 SYSTEM CONNECTOR 16P (F) HOUSING (TYPE B)	PBT GF15	BLUE	1	7182-4074-90	SPACERLESS
								7282-5535-90	YESC
		2	7158-5979	YESC KAIZEN 1.5 SYSTEM CONNECTOR 16P (F) FRONT HOLDER	PBT H01	NATURAL	1	7282-6456-90	YESC KAIZEN
△	7283-6456-80	4	7183-6456-80	YESC KAIZEN 1.5 SYSTEM CONNECTOR 16P (F) HOUSING (TYPE B)	PBT GF15	BROWN	1	7182-4075-80	SPACERLESS
		2	7158-5979	YESC KAIZEN 1.5 SYSTEM CONNECTOR 16P (F) FRONT HOLDER	PBT H01	NATURAL	1		
△	7283-6453-70 △(7C83-6453-70)	5	7183-6453-70 △(7B83-6453-70)	YESC KAIZEN 1.5 SYSTEM CONNECTOR 16P (F) HOUSING (TYPE A)	PBT GF15	YELLOW	1	7282-6453-70 △(7C82-6453-70)	YESC KAIZEN
		2	7158-5979 △(7B58-5979)	YESC KAIZEN 1.5 SYSTEM CONNECTOR 16P (F) FRONT HOLDER	PBT H01	NATURAL	1		
△	7283-3585-40	6	7183-3585-40	YESC KAIZEN 1.5 SYSTEM CONNECTOR 16P (F) HOUSING (TYPE C)	PBT GF15	LIGHT GRAY	1	7182-4076-40	SPACERLESS
		2	7158-5979	YESC KAIZEN 1.5 SYSTEM CONNECTOR 16P (F) FRONT HOLDER	PBT H01	NATURAL	1	7282-5536-40	YESC
△	7289-9097	7	7189-9097	YESC KAIZEN 1.5 SYSTEM CONNECTOR 16P (F) HOUSING (TYPE D)	PBT GF15	NATURAL	1	7182-4077	SPACERLESS
		2	7158-5979	YESC KAIZEN 1.5 SYSTEM CONNECTOR 16P (F) FRONT HOLDER	PBT H01	NATURAL	1		
		△△						△	△

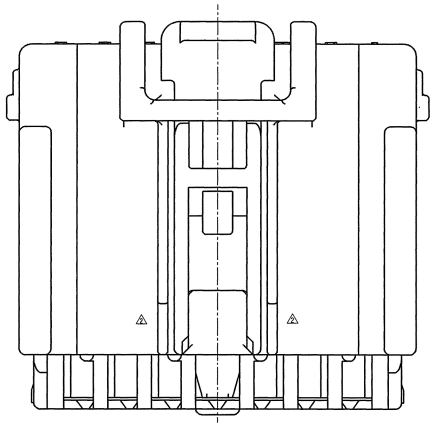

△ NOTES:
1. MATERIAL: SEE TABLE;
2. COLOR: SEE TABLE;
3. APPLICABLE TERMINALS: 7116-4100-02, ETC.;
4. MATING PRODUCT NO.: SEE TABLE;
5. FOR GENERAL GEOMETRICAL TOLERANCE SEE TABLE (ECCENT=ECCENTRICITY);
6. HANDLING MANUAL: YPES-15-599E;
7. △ THE MATERIALS USED IN THIS PRODUCT ARE IN CONFORMITY WITH REQUIREMENTS OF EU ELV 2000/53/EC DIRECTIVE AND ASSOCIATED DOCUMENTS;
8. △ THIS DIMENSION SHOWS THE PRESET POSITION OF FRONT HOLDER ON THE SUBASSEMBLY;
9. △ APPLICABLE CONNECTOR INTERFACE ACCORDING DRAWING: 7283-6453-60:A.

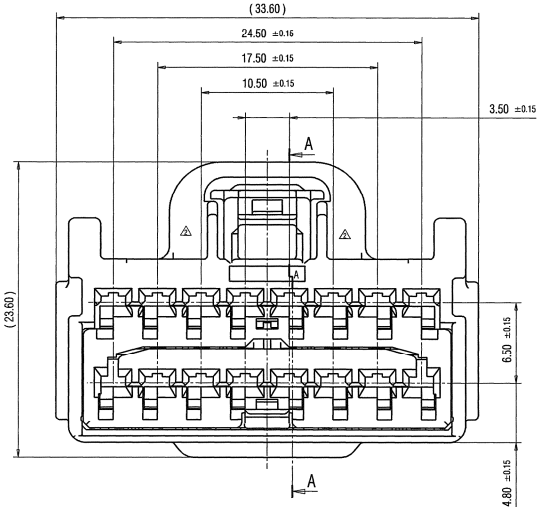

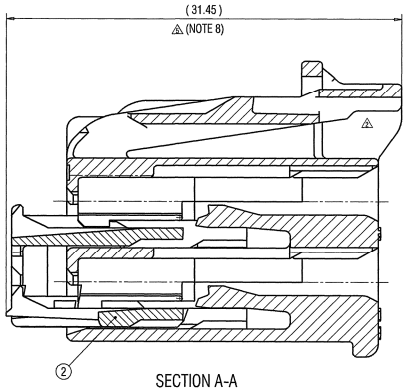

SECTION A-A

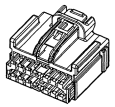

ISOMETRIC VIEW
(SCALE 1:1)

△	27.01.2017.	ADDED NEW PART NO.	Y17-0073	M.V.
△	18.03.2013.	ADDED NEW PART NO.	Y13-0148	G.G.
△	13.02.2013.	ADDED NEW PART NO.	Y13-0079	G.G.
△	07.12.2007.	ADDED NOTES & NEW PART NO. CHANGED GEOMETRY	C07-D897	G.G.
△	06.08.2002.	CHANGED REVISION RECORD NUMBER	C02-E240	M.K.
△	07.08.2002.	NEW	C02-E237	M.K.
LET	DATE	REVISION RECORD	NO.	CHKD

PRINTED COPIES ARE UNCONTROLLED. THEY ARE POTENTIALLY OUT-OF-DATE AND INVALID. DATABASE IS MASTER.

GENERAL TOLERANCE						
	10MAX	50MAX	100MAX	250MAX	2500VR	ANGLE	ECCENT
A	±0.15	±0.2	±0.3	±0.5	±0.75	±30'	0.1
B	±0.2	±0.3	±0.55	±0.95	±1.4	±30'	0.1
Ⓒ	±0.3	±0.5	±0.8	±1.4	±2	±30'	0.15
SPECIFIED						MASS	9.9 g

CUSTOMER		
CUSTOMER PART NO.	CUSTOMER DWG NO.	
OFFICE YEL-K	TRIAL PART NO.	
VENDOR		
VENDOR NO.		

DWG TYPE	DWG SOURCE	DWG DATE	UNIT	SCL	ANGLE
R	NEW	13.01.2003.	mm	5/1	3

APPROVED	CHECKED	CHECKED	DESIGN	DRAWN
G.GREGURIC	M.VALJAK	T.SALINOVIC	M.KASHIYAMA	M.MANDIR
30.9.2017.	27.01.2017.	27.01.2017	07.08.2002.	27.01.2017.

MATL. SPEC. SEE TABLE | TREAT. & FIN.

NAME YESC KAIZEN 1.5 SYSTEM CONNECTOR 16P (F) SUB ASS'Y (TYPE A, B, C & D) △

PART NO. / CH. CODE 7283-6453-60, ETC.

DWG NO. 7283-6453-60: R | SET DWG NO.

YAZAKI

ISSUE MARK

A1