TYPE A	TYPE B
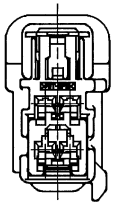	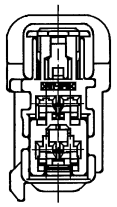
7283-6449-40	7283-3443-60
7283-6449-50	
7283-6449-70	

SUB ASSEMBLY PART NO.	NO.	PART NO.	PART NAME	MATERIAL	COLOR	QTY.	YAZAKI MATING PART NO.
7283-6449-40	①	7183-6449-40	1.5 SYSTEM CONNECTOR 4P (F) HOUSING (TYPE-A)	PBT-GF15	GRAY	1	7282-6449-40
	②	7158-5977	1.5 SYSTEM CONNECTOR 4P (F) FRONT HOLDER	PBT	NATURAL	1	
7283-6449-50	①	7183-6449-50	1.5 SYSTEM CONNECTOR 4P (F) HOUSING (TYPE-A)	PBT-GF15	ORANGE	1	N/A
	②	7158-5977	1.5 SYSTEM CONNECTOR 4P (F) FRONT HOLDER	PBT	NATURAL	1	
7283-6449-70	①	7183-6449-70	1.5 SYSTEM CONNECTOR 4P (F) HOUSING (TYPE-A)	PBT-GF15	YELLOW	1	N/A
	②	7158-5977	1.5 SYSTEM CONNECTOR 4P (F) FRONT HOLDER	PBT	NATURAL	1	
7283-3443-60	①	7183-3443-60	1.5 SYSTEM CONNECTOR 4P (F) HOUSING (TYPE-B)	PBT-GF15	GREEN	1	7282-3443-60
	②	7158-5977	1.5 SYSTEM CONNECTOR 4P (F) FRONT HOLDER	PBT	NATURAL	1	

NOTES
1) MATING PART NO.: SEE TABLE
2) APPLICABLE TERMINAL PART NO.: 7116-4100-02 ETC.

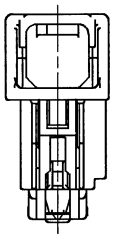

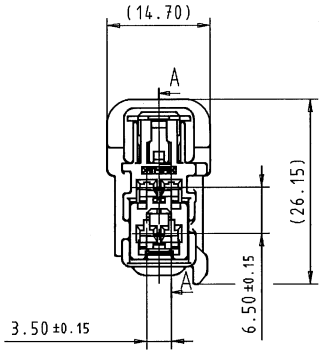

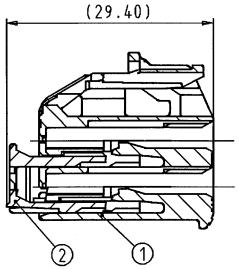

SECTION A-A

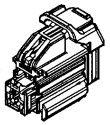

ISOMETRIC VIEW
(SCALE 1:1)

LET	DATE	REVISION RECORD	NO.	CHKD
A	02/06/03	NEW	C02-E142	S.T.

GENERAL TOLERANCE							
	10MAX	50MAX	100MAX	250MAX	2500VR	ANGLE	ECCENT
A	±0.15	±0.2	±0.3	±0.5	±0.75	±30′	0.1
B	±0.2	±0.3	±0.55	±0.95	±1.4	±30′	0.1
C	±0.3	±0.5	±0.8	±1.4	±2	±30′	0.15
SPECIFIED						MASS 4.2 g	

CUSTOMER						
CUSTOMER PART NO.	CUSTOMER DWG NO.					
OFFICE	TRIAL PART NO.					
VENDOR						
VENDOR NO.						
DWG TYPE	DWG SOURCE	DWG DATE	UNIT	SCL	ANGLE	
R	NEW	02/12/06	mm	2/1	3	
APPROVED	CHECKED	CHECKED	DESIGN	DRAWN		
M.PFAFF	M.KASHIYAMA	G.GREGURIC	S.TSUCHIYA	I.JELICIC		
		02/12/06	02/06/03	02/12/06		

MATL. SPEC.: SEE TABLE
TREAT. & FIN.
NAME 1.5 SYSTEM CONNECTOR 4P (F) SUB ASS' Y (TYPE A & B)
PART NO. / CH.CODE 7283-6449-40, ETC.
DWG NO. 7283-6449-40: R
SET DWG NO.
YAZAKI CORPORATION

ISSUE MARK

A2