SUB ASSEMBLY PART NUMBER	NO.	PART NUMBER	PART NAME	MATERIAL	COLOR	QUANTITY
7283-6445-40	1	7183-6445-40	2P 2.8mm YESC KAIZEN UNSEALED FEMALE HOUSING	PBT+GF	LIGHT GRAY	1
	2	7158-5972-50	2P 2.8mm YESC KAIZEN UNSEALED FEMALE TPA	PBT	ORANGE	1

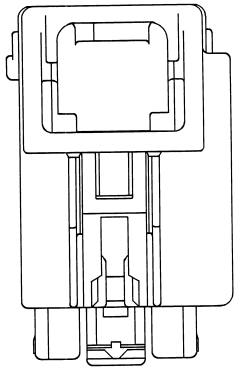

(1/1)

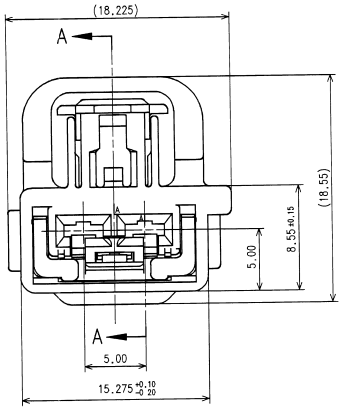

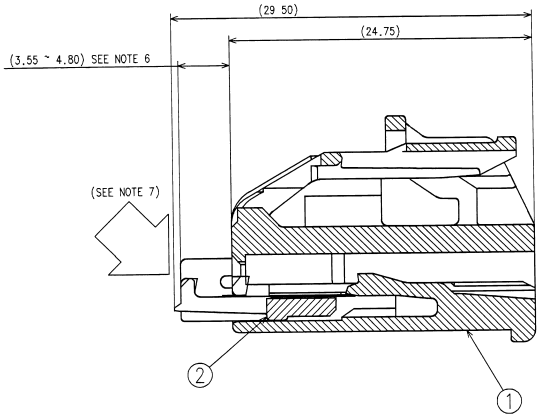

SECTION A-A

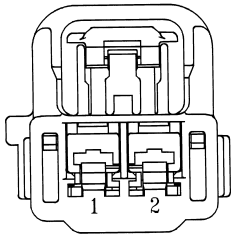

NOTES.

1. PARTS MUST BE PURCHASED FROM YAZAKI.
2. PARTS MUST BE FREE OF FLASH AND IMPERFECTIONS THAT AFFECT FUNCTION.
3. APPLICABLE TERMINAL NUMBER. SEE 7116-4270-02 R DRAWING. (2.8mm YESC KAIZEN)
   SEE 7116-4110-02 R DRAWING. (2.8mm YESC)
4. MATING PART NUMBER. 7282-6445-40
5. PART DESIGNED TO SATISFY USCAR-2, REVISION 3, DATED APRIL 2001, CLASS 2.
6. THIS DIMENSION SHOWS THE PRE-SET POSITION OF THE TPA.
7. PROPER LOCK AND RELEASE FOR TPA MUST BE CARRIED OUT WHILE PUSHING FINAL LOCK ARM IN THE ARROW DIRECTION.
8. THIS DRAWING IS TO BE USED FOR INTERNAL YAZAKI PSW SUBMISSION.

ISSUE MARK

LET	DATE	REVISION RECORD	NO.	CHKD
-	11.17.05	NEW	C05-AD60	U.O.

GENERAL TOLERANCE

	10MAX	50MAX	100MAX	250MAX	2500VR	ANGLE	ECCENT
A	±0.15	±0.2	±0.3	±0.5	±0.75	±30′	0.1
B	±0.2	±0.3	±0.55	±0.95	±1.4	±30′	0.1
C	±0.3	±0.5	±0.8	±1.4	±2	±30′	0.15

SPECIFIED

WEIGHT g

CUSTOMER						
CUSTOMER PART NO.		CUSTOMER DWG NO.				
OFFICE	YNA	TRIAL PART NO				
VENDOR						
VENDOR NO.						
DWG TYPE	DWG SOURCE	DWG DATE	UNIT	SCL	ANGLE	
R	7283-6445-40 MAS	11 17 05	mm	5/1	3	
APPROVED	CHECKED	CHECKED	DESIGN	DRAWN		
11.28.05	11.28.05	11.28.05	JEN VUN NG	07.11.02	11.21.05	

MATL. SPEC.: SEE TABLE

TREAT. & FIN.

NAME: 2P 2.8 YESC KAIZEN UNSEALED FEMALE SUB ASSEMBLY

PART NO. 7283-6445-40

DWG NO. 7283-6445-40:R

YAZAKI CORPORATION