	SUB ASSEMBLY PART NO.	NO.	PART NO.	PART NAME	MATERIAL	COLOR	QTY.
CODE B	7283-6440-30	①	7183-6440-30	2.8 SYSTEM SEALED CONNECTOR 8P (F) HOUSING CODE B	HPA-LG20	BLACK	1
		②	7158-4195	2.8 SYSTEM SEALED CONNECTOR 8P (F) FRONT HOLDER	HPA-LG20	NATURAL	1
		③	7137-2754-90	2.8 SYSTEM SEALED CONNECTOR 8P (F) PACKING	SELF-LUBRICATING SILICONE RUBBER	BLUE	1
	⚠7287-1073-30	①	7183-6440-30	2.8 SYSTEM SEALED CONNECTOR 8P (F) HOUSING CODE B	HPA-LG20	BLACK	1
		②	7158-4195	2.8 SYSTEM SEALED CONNECTOR 8P (F) FRONT HOLDER	HPA-LG20	NATURAL	1
		③	7137-2754-90	2.8 SYSTEM SEALED CONNECTOR 8P (F) PACKING	SELF-LUBRICATING SILICONE RUBBER	BLUE	1
		⑥	7158-7657-50	CPA FOR SEALED CONNECTOR 2.8 SYSTEM	PBT-GF 15	RED	1
CODE C	7283-6441-40	④	7183-6441-40	2.8 SYSTEM SEALED CONNECTOR 8P (F) HOUSING CODE C	HPA-LG20	LIGHT GREY	1
		②	7158-4195	2.8 SYSTEM SEALED CONNECTOR 8P (F) FRONT HOLDER	HPA-LG20	NATURAL	1
		③	7137-2754-90	2.8 SYSTEM SEALED CONNECTOR 8P (F) PACKING	SELF-LUBRICATING SILICONE RUBBER	BLUE	1
	⚠7287-1074-40	④	7183-6441-40	2.8 SYSTEM SEALED CONNECTOR 8P (F) HOUSING CODE C	HPA-LG20	LIGHT GREY	1
		②	7158-4195	2.8 SYSTEM SEALED CONNECTOR 8P (F) FRONT HOLDER	HPA-LG20	NATURAL	1
		③	7137-2754-90	2.8 SYSTEM SEALED CONNECTOR 8P (F) PACKING	SELF-LUBRICATING SILICONE RUBBER	BLUE	1
		⑤	7158-7657-50	CPA FOR SEALED CONNECTOR 2.8 SYSTEM	PBT-GF 15	RED	1
CODE D	7283-6442-80	⑤	7183-6442-80	2.8 SYSTEM SEALED CONNECTOR 8P (F) HOUSING CODE D	HPA-LG20	BROWN	1
		②	7158-4195	2.8 SYSTEM SEALED CONNECTOR 8P (F) FRONT HOLDER	HPA-LG20	NATURAL	1
		③	7137-2754-90	2.8 SYSTEM SEALED CONNECTOR 8P (F) PACKING	SELF-LUBRICATING SILICONE RUBBER	BLUE	1

NOTES:
⚠1. MATERIAL: SEE TABLE.
⚠2. COLOR: SEE TABLE.
3. APPLICABLE TERMINALS: 7116-4150-02 etc.
4. APPLICABLE SEALS: 7158-3111-60 etc.
5. THIS DIMENSION SHOWS THE PRESET POSITION OF FRONT HOLDER ON THE SUBASSEMBLY.
6. CORRECT FRONT HOLDER (LOCK AND RELEASE) IS ACHIVED BY PUSHING THE LOCK ARM IN IN THE ARROWED DIRECTION.
7. MATING PART ACCORDING DRAWING: N/A (DIRECT CONNECTION).
⚠8. FOR GENERAL GEOMETRICAL TOLERANCE SEE TABLE (ECCENT=ECCENTRICITY).
⚠9. HANDLING MANUAL: YPES-15-299.
⚠10. PRODUCT STANDARD: YPES-11-04-062.

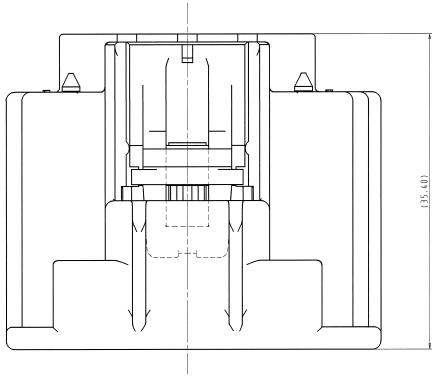

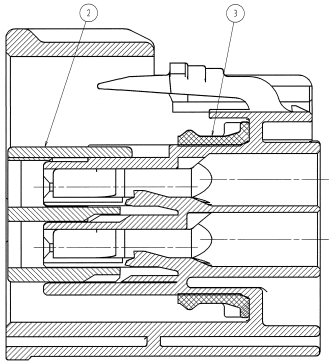

SECTION B-B

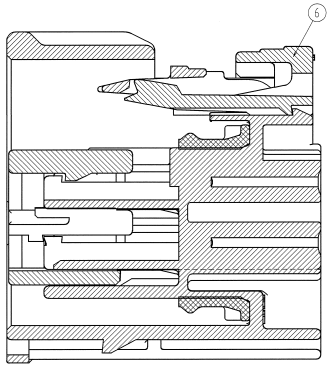

⚠SECTION A-A (7287-1073-30 AND 7287-1074-40)

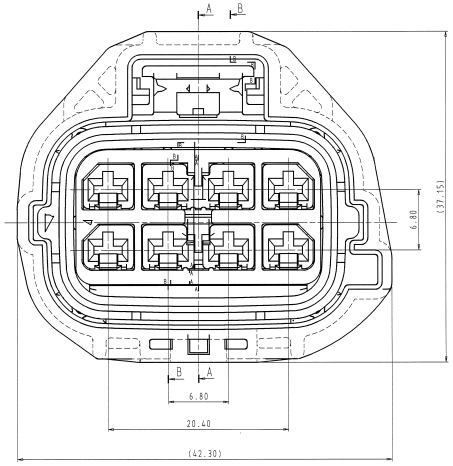

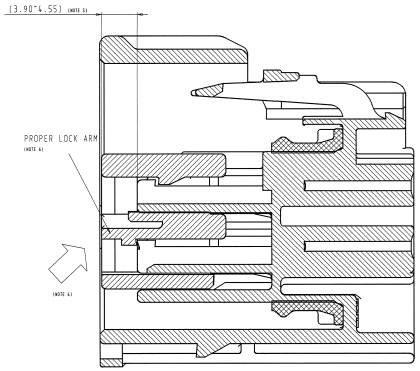

SECTION A-A

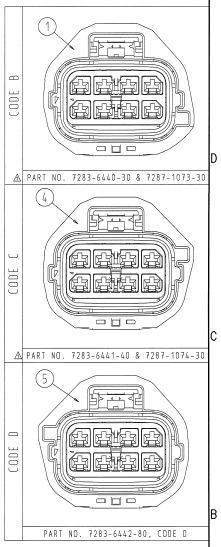

ISOMETRIC VIEW
(SCALE 1:1)

LET	DATE	REVISION RECORD	NO.	CHKD
⚠	06/09/04	ADDED NEW PART NUMBERS, NEW VIEW & CHANGED NOTES	C06-0729	G.G.
⚠	05/01/18	NEW	C05-0506	G.G.

GENERAL TOLERANCE

	10MAX	50MAX	100MAX	250MAX	2500VR	ANGLE	ECCENT
A	±0.15	±0.2	±0.3	±0.5	±0.75	±30°	0.1
B	±0.2	±0.3	±0.55	±0.95	±1.4	±30°	0.1
C	±0.3	±0.5	±0.8	±1.4	±2	±30°	0.15

SPECIFIED The materials used in this product are in conformity with requirements of 98/101/EC directive and associated documents.

CUSTOMER		
CUSTOMER PART NO.	CUSTOMER DWG NO.	
OFFICE YTL-K	TRIAL PART NO.	
VENDOR		
VENDOR NO.		

DWG TYPE	DWG SOURCE	DWG DATE	UNIT	SCL	ANGLE
R	NEW	02/01/17	mm	2/1	3

APPROVED	CHECKED	CHECKED	DESIGN	DRAWN
K.MIYAZAKI	S.SUGIMANO	K.OKUDA	K.NOETHER	T.JELICIC

MASS g

MATL. SPEC.	SEE TABLE	TREAT. & FIN.	
NAME	2.8 SYSTEM SEALED CONNECTOR 8P (F) SUB ASSEMBLY CODE B/C/D		
PART NO.	7283-6440-30, ETC.		
GI CODE			
DWG NO.	7283-6440-30:R	SET DWG NO.	

YAZAKI CORPORATION

ISSUE MARK

A0