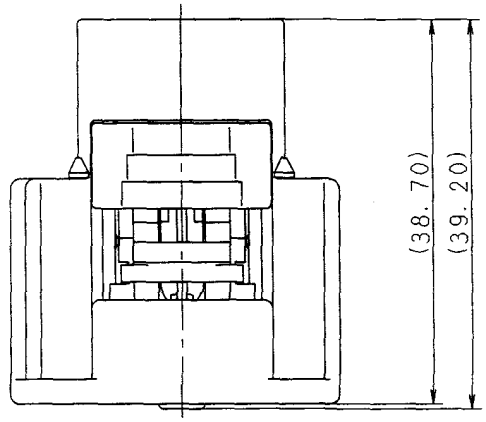

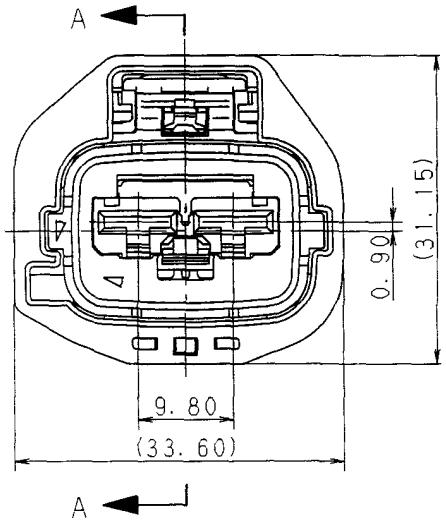

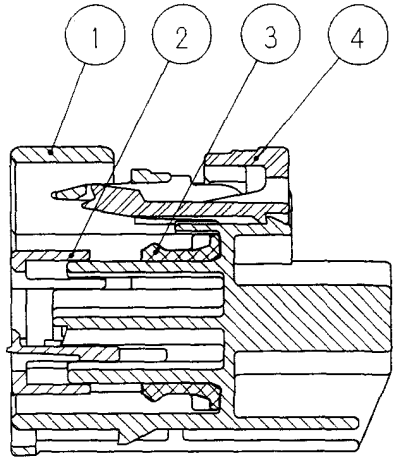

SEC. A-A

QTY.		NO.	PART NO. AND CH. CODE	MATERIAL	COLOR
1	1	1	7183-5596-10	HPA	DARK GRAY
1	1	2	7158-4219	HPA	NATURAL
1	1	3	7137-2741-70	SILICONE RUBBER	MAIZE YELLOW
1		4	7158-7080-50	HPA	RED
7283-5928-10	7283-5596-10	SUB ASSEMBLY PART NO. & CH. CODE			

注記

1. 嵌合相手品番 : 7282-5596-10
2. 適用端子品番 : 7116-4140-02 ETC.
3. △1 適用ゴム栓品番 : 7158-3081-50 ETC.
4. △1 適用防水栓品番 : 7158-3080-60

NOTES

1. MATING PART NO. : 7282-5596-10
2. APPLICABLE TERMINAL PART NO. : 7116-4140-02 ETC.
3. △1 APPLICABLE WIRE SEAL NO. : 7158-3081-50 ETC.
4. △1 APPLICABLE DUMMY PLUG NO. : 7158-3080-60

ISSUE MARK

LET	DATE	REVISION RECORD	NO.	CHKD
△1	99.11.18	ADDED PART NO. ETC.	C99-M658	M.K
	97.05.06	NEW	C97-L785	H.K

GENERAL TOLERANCE

	10MAX	50MAX	100MAX	250MAX	2500VR	ANGLE	ECCENT
A	±0.15	±0.2	±0.3	±0.5	±0.75	±30'	0.1
B	±0.2	±0.3	±0.55	±0.95	±1.4	±30'	0.1
C	±0.3	±0.5	±0.8	±1.4	±2	±30'	0.15

SPECIFIED

MASS 9

CUSTOMER

CUSTOMER PART NO. | CUSTOMER DWG NO.

OFFICE | TRIAL PART NO.

VENDOR

VENDOR NO.

DWG TYPE	DWG SOURCE	DWG DATE	UNIT	SCL	ANGLE
R	NEW	97.05.06	mm	2/1	3

APPROVED	CHECKED	CHECKED	DESIGN	DRAWN
酒井	平田	永野 繁	IWAHORI	T. YAMANE 樫山マ
99.11.23	99.11.23	99.11.22	97.03.28	99.11.18

MATL. SPEC. SEE TABLE

TREAT. & FIN.

NAME 6.3 SYSTEM SEALED CONNECTOR 2P(F) SUB ASSEMBLY

PART NO. CH. CODE △7283-5596-10 ETC.

DWG NO. 7283-5596-10:R

SET DWG NO.

YAZAKI CORPORATION