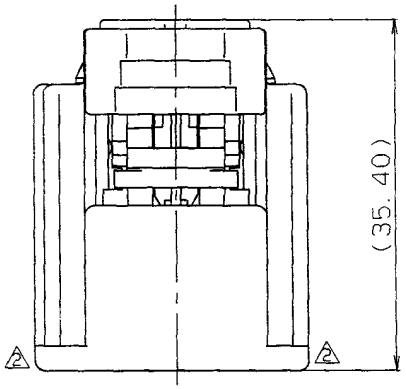

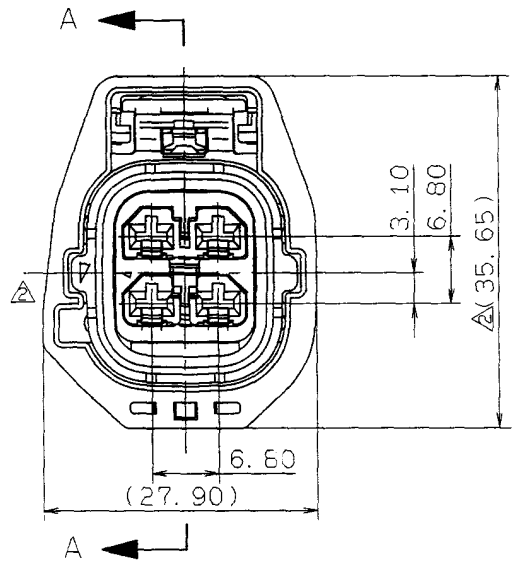

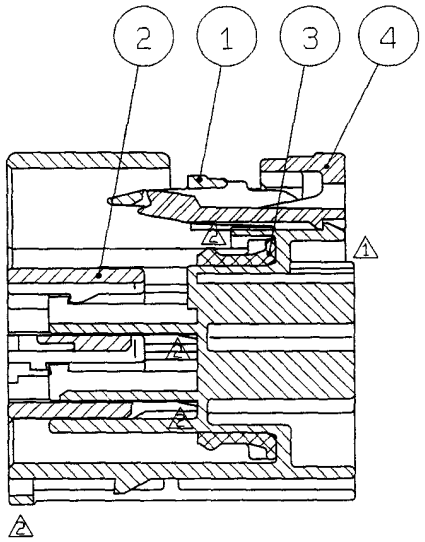

SEC. A-A

QTY.		NO.	PART NO. AND CH. CODE	MATERIAL	COLOR
1	1	1	7183-5570-10	HPA	DARK GRAY
1	1	2	7158-4193	HPA	NATURAL
1	1	3	7137-2750-90	SILICONE RUBBER	BLUE
1		4	7158-7080-50	HPA	RED
3 7283-5924-10	7283-5570-10. A	SUB ASSEMBLY PART NO. & CH. CODE			

NOTES

1. APPLICABLE TERMINAL PART NO. :7116-4150-02 ETC.
2. MATING PART NO. :7282-5570-10
3. 3 APPLICABLE WIRE SEAL NO. :7158-3111-60 ETC.
4. 3 APPLICABLE DUMMY PLUG NO. :7158-3114-90

注 記

1. 適用端子品番 :7116-4150-02 ETC.
2. 嵌合相手品番 :7282-5570-10
3. 3 適用ゴム栓品番:7158-3111-60 ETC.
4. 3 適用防水栓品番:7158-3114-90

ISSUE MARK

LET	DATE	REVISION RECORD	NO.	CHKD
3	99. 11. 15	ADDED PART NO. ETC.	C99-M695	M. K
2	98. 06. 04	CHANGED FORM ETC. . A	C98-L924	Y. I
1	96. 08. 02	CHANGED FORM	C96-M443	A. Y
—	96. 07. 29	NEW	C96-M167	H. K

GENERAL TOLERANCE

	10MAX	50MAX	100MAX	250MAX	2500VR	ANGLE	ECCENT
A	±0. 15	±0. 2	±0. 3	±0. 5	±0. 75	±30'	0. 1
B	±0. 2	±0. 3	±0. 55	±0. 95	±1. 4	±30'	0. 1
C	±0. 3	±0. 5	±0. 8	±1. 4	±2	±30'	0. 15

SPECIFIED

MASS g

CUSTOMER

CUSTOMER PART NO.

CUSTOMER DWG NO.

OFFICE

TRIAL PART NO.

VENDOR

VENDOR NO.

DWG TYPE	DWG SOURCE	DWG DATE	UNIT	SCL	ANGLE
R	NEW	96. 07. 29	mm	2/1	3

APPROVED	CHECKED	CHECKED	DESIGN	DRAWN
酒井	甲田	赤野 鈴木(貴)	Y. UCHIDA	AOYAMA 樫山マ
99. 11. 23	99. 11. 23	99. 11. 19	96. 06. 03	99. 11. 15

MATL. SPEC. SEE TABLE

TREAT. & FIN.

NAME 2. 8 SYSTEM SEALED CONNECTOR 4P(F) SUB ASSEMBLY(TYPE-A)

PART NO. CH. CODE 3 7283-5570-10 ETC.

DWG NO. 7283-5570-10:R

SET DWG NO.

YAZAKI CORPORATION