TABLE 1

SUB ASSEMBLY PART NO. AND CH. CODE	NO.	PART NO. AND CH. CODE	MATERIAL	COLOR	QTY.
△1 7283-4854 ETC.	①	△1 SEE TABLE 2	PBT	△1 SEE TABLE 2	1
	②	7158-6250	PBT	NATURAL	1

TABLE 2

	SUB ASSEMBLY PART NO. AND CH. CODE	PART NO. AND CH. CODE	COLOR
	7283-4854, [A]	7183-4854	NATURAL
△1	7283-4854-40, [A]	7183-4854-40	LIGHT GRAY

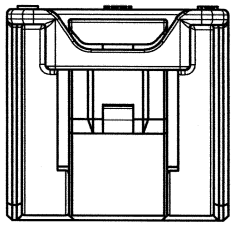

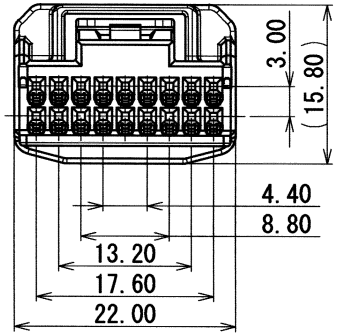

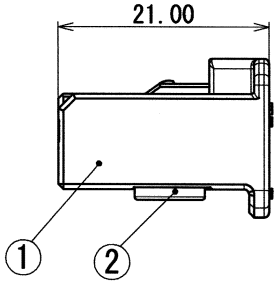

注記

△1 1. 嵌合相手品番 : 7282-4854 ETC.

2. 適用端子品番 : 7116-4728-02 ETC.

NOTES

△1 1. MATING PART NO. : 7282-4854 ETC.

2. APPLICABLE TERMINAL NO. : 7116-4728-02 ETC.

ISSUE MARK

LET	DATE	REVISION RECORD	NO.	CHKD
△1	04.10.06	ADDED COLOR PART NO., ETC, [A]	C04-ZC30	T.H
	03.03.19	NEW	C03-X215	T.H

GENERAL TOLERANCE

	10MAX	50MAX	100MAX	250MAX	2500VR	ANGLE	ECCENT
A	±0.15	±0.2	±0.3	±0.5	±0.75	±30'	0.1
B	±0.2	±0.3	±0.55	±0.95	±1.4	±30'	0.1
Ⓒ	±0.3	±0.5	±0.8	±1.4	±2	±30'	0.15

SPECIFIED

MASS g

CUSTOMER					
CUSTOMER PART NO.		CUSTOMER DWG NO.			
OFFICE		TRIAL PART NO.			
VENDOR					
VENDOR NO.					
DWG TYPE	DWG SOURCE	DWG DATE	UNIT	SCL	ANGLE
R	NEW	03.03.19	mm	2/1	3
APPROVED	CHECKED	CHECKED	DESIGN	DRAWN	
04.10.7	04.10.7	04.10.06	T.HARA 01.11.29	E.PANTONI ROMEL GALIZA 04.10.06	

MATL. SPEC. SEE TABLE

TREAT. & FIN.

NAME 0.64Ⅱ 18P CONNECTOR HOUSING FEMALE SUB ASSEMBLY

PART NO. CH. CODE △1 7283-4854 ETC.

DWG NO. 7283-4854:R

SET DWG NO.

YAZAKI CORPORATION