SUB ASSEMBLY PART NUMBER	NO.	PART NUMBER	PART NAME	MATERIAL	COLOR	QUANTITY
7283-3440-40	1	7183-3440-40	3P 1.5mm YESC KAIZEN UNSEALED FEMALE HOUSING	PBT + GF	LIGHT GRAY	1
	2	7158-6190	3P 1.5mm YESC KAIZEN UNSEALED FEMALE TPA	PBT	NATURAL	1

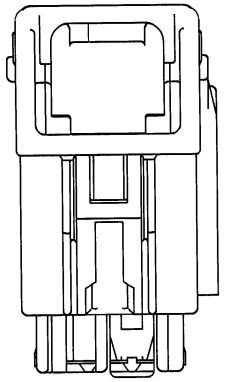

(1/1)

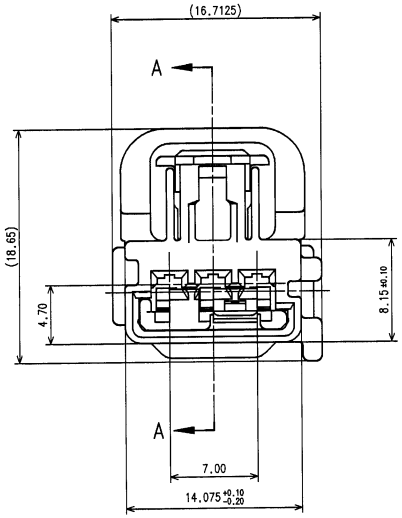

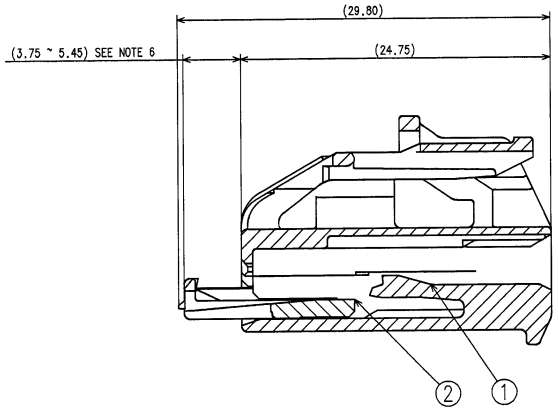

SECTION A-A

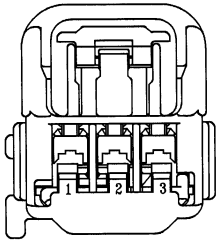

NOTES:
1. PARTS MUST BE PURCHASED FROM YAZAKI.
2. PARTS MUST BE FREE OF FLASH AND IMPERFECTIONS THAT AFFECT FUNCTION.
3. APPLICABLE TERMINAL: SEE 7116-4780-02:R DRAWING (1.5mm YESC KAIZEN)
   7116-4100-02:R DRAWING (1.5mm YESC)
   7116-4100-08:R DRAWING (1.5mm YESC)
4. MATING PART NUMBER: 7282-3440-40
5. PART DESIGNED TO SATISFY USCAR-2, REV.3, APRIL 2001, CLASS 2 WITH THE FOLLOWING EXCEPTIONS:
   A. SECTION 5.4.2 LOCK DEFLECTION FORCE
6. THIS DIMENSION SHOWS THE PRE-SET POSITION OF THE TPA.
7. THIS DRAWING IS TO BE USED FOR INTERNAL YAZAKI PSW SUBMISSION.

ISSUE MARK

LET	DATE	REVISION RECORD	NO.	CHKD
-	01.05.06	NEW	C06-A020	CJB

GENERAL TOLERANCE	10MAX	50MAX	100MAX	250MAX	2500VR	ANGLE	ECCENT
A	±0.15	±0.2	±0.3	±0.5	±0.75	±30'	0.1
B	±0.2	±0.3	±0.55	±0.95	±1.4	±30'	0.1
C	±0.3	±0.5	±0.8	±1.4	±2	±30'	0.15
SPECIFIED						WEIGHT	g

CUSTOMER					
CUSTOMER PART NO.		CUSTOMER DWG NO.			
OFFICE YNA		TRIAL PART NO.			
VENDOR					
VENDOR NO.					
DWG TYPE	DWG SOURCE	DWG DATE	UNIT	SCL	ANGLE
R	7283-3440-40:M	01.05.06	mm	5/1	3
APPROVED	CHECKED	CHECKED	DESIGN	DRAWN	
01.05.06	01.05.06	01.05.06	DESMOND ONG 09.26.02	01.05.06	

MATL. SPEC.: SEE TABLE
TREAT. & FIN.
NAME: 3P 1.5mm YESC KAIZEN UNSEALED FEMALE SUB-ASSEMBLY
PART NO.: 7283-3440-40
DWG NO.: 7283-3440-40:R
YAZAKI CORPORATION