TABLE 1

| SUB ASSEMBLY PART NO. AND CH. CODE | NO. | PART NO. AND CH. CODE | MATERIAL | COLOR | QTY. |
|---|---|---|---|---|---|
| 7283-1440 ETC. | ① | SEE TABLE 2 | PBT | SEE TABLE 2 | 1 |
| | ② | 7158-5164 | PBT | NATURAL | 1 |
| | ③ | 7137-2670-80 | SILICONE RUBBER | RED IRON | 1 |

TABLE 2

| SUB ASSEMBLY PART NO. AND CH. CODE | PART NO. AND CH. CODE | COLOR |
|---|---|---|
| 7283-1440 | 7183-1440 | NATURAL |
| 7283-1440-30 | 7183-1440-30 | BLACK |
| 7283-1440-40 | 7183-1440-40 | LIGHT GRAY |

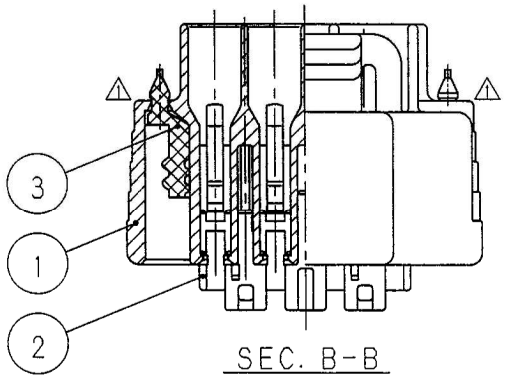


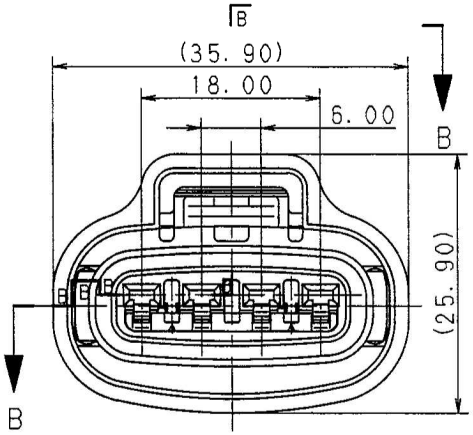


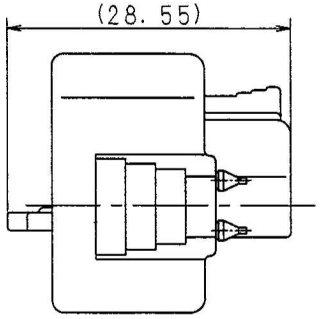


注 記

1. 適用端子品番 : 7116-4025 ETC.

NOTE

1. APPLICABLE TERMINAL NO. : 7116-4025 ETC.

ISSUE MARK

| LET | DATE | REVISION RECORD | NO. | CHKD |
|---|---|---|---|---|
| ⚠ | 98.12.04 | CHANGED FORM | C98-N055 | T.M |
| | 98.10.08 | NEW | C98-M744 | M.N |

GENERAL TOLERANCE

| | 10MAX | 50MAX | 100MAX | 250MAX | 2500VR | ANGLE | ECCENT |
|---|---|---|---|---|---|---|---|
| A | ±0.15 | ±0.2 | ±0.3 | ±0.5 | ±0.75 | ±30′ | 0.1 |
| B | ±0.2 | ±0.3 | ±0.55 | ±0.95 | ±1.4 | ±30′ | 0.1 |
| Ⓒ | ±0.3 | ±0.5 | ±0.8 | ±1.4 | ±2 | ±30′ | 0.15 |

SPECIFIED

MASS g

CUSTOMER

CUSTOMER PART NO. | CUSTOMER DWG NO.

OFFICE | TRIAL PART NO.

VENDOR

VENDOR NO.

| DWG TYPE | DWG SOURCE | DWG DATE | UNIT | SCL | ANGLE |
|---|---|---|---|---|---|
| R | NEW | 98.10.08 | mm | 2/1 | 3 |

| APPROVED | CHECKED | CHECKED | DESIGN | DRAWN |
|---|---|---|---|---|
| 加藤 | 山梨 | 田宮 | M. NAKAMURA | KANAZAWA 田中ひ |
| 98.12.24 | 98.12.24 | 98.12.21 | 98.09.14 | 98.12.04 |

MATL. SPEC. SEE TABLE 1 | TREAT. & FIN.

NAME 090II 4P SEALED CONNECTOR HOUSING FEMALE SUB ASSEMBLY

PART NO. CH. CODE 7283-1440 ETC.

DWG NO. 7283-1440:R | SET DWG NO.

YAZAKI CORPORATION