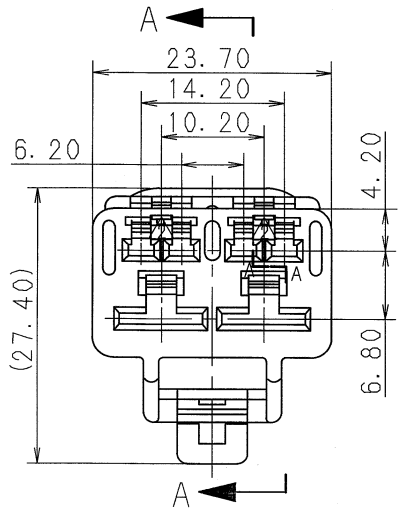

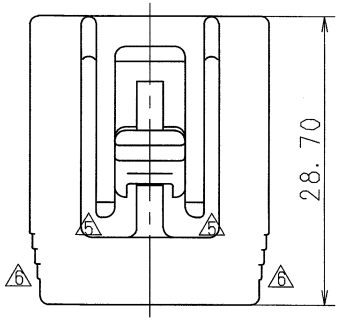

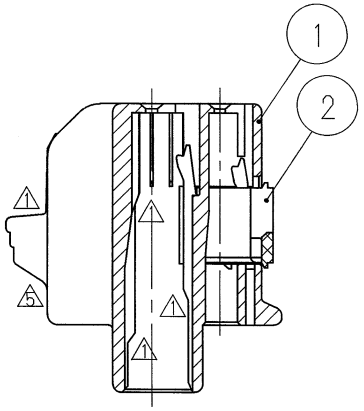

SEC. A-A

TABLE 1

SUB ASSEMBLY PART NO. AND CH. CODE	NO.	PART NO. AND CH. CODE	MATERIAL	COLOR	QTY.
7283-1064 ETC.	1	SEE TABLE 2	4 PBT	SEE TABLE 2	1
	2	7157-4331	4 PBT	NATURAL	1

5 TABLE 2

SUB ASSEMBLY PART NO. AND CH. CODE	PART NO. AND CH. CODE	COLOR
7283-1064, D	7183-1064	NATURAL
7283-1064-30, D	7183-1064-30	BLACK
7283-1064-40, D	7183-1064-40	LIGHT GRAY
7283-1064-50, D	7183-1064-50	ORANGE
1 7283-1064-60, D	7183-1064-60	GREEN
7283-1064-90, D	7183-1064-90	BLUE

注 記

1. 嵌合相手品番： 7282-1064 ETC.
6 2. 適用端子品番： 7116-4020 ETC. 2.3Ⅱ(090Ⅱ)
5 ： 7116-6040 ETC. 8.0(312)

NOTES

1. MATING PART NO. : 7282-1064 ETC.
6 2. APPLICABLE TERMINAL NO. : 7116-4020 ETC. 2.3Ⅱ(090Ⅱ)
5 : 7116-6040 ETC. 8.0(312)

LET	DATE	REVISION RECORD	NO.	CHKD
6	03.06.03	CHANGED FORM & PART NAME	C03-X353	Y. I
5	99.05.11	CHANGED FORM & NOTES, D	C99-L582	T. M
4	97.12.11	CHANGED MATERIAL	C97-N740	H. K
3	96.07.12	CHANGED MATERIAL, C	C96-M262	H. K
2	96.03.01	CORRECTION OF A CLERICAL ERROR, B	C96-L303	H. K
1	95.12.04	CHANGED FORM & ADDED PART NO., A	C95-M996	H. T
	90.11.10	NEW	C90-M211	M. H

GENERAL TOLERANCE

	10MAX	50MAX	100MAX	250MAX	2500VR	ANGLE	ECCENT
A	±0.15	±0.2	±0.3	±0.5	±0.75	±30′	0.1
B	±0.2	±0.3	±0.55	±0.95	±1.4	±30′	0.1
C	±0.3	±0.5	±0.8	±1.4	±2	±30′	0.15

SPECIFIED

MASS g

ISSUE MARK

CUSTOMER

CUSTOMER PART NO. | CUSTOMER DWG NO.

OFFICE | TRIAL PART NO.

VENDOR

VENDOR NO.

DWG TYPE	DWG SOURCE	DWG DATE	UNIT	SCL	ANGLE
R	NEW	90.11.10	mm	2/1	3

APPROVED	CHECKED	CHECKED	DESIGN	DRAWN
不明			Y. OHTA	Y. OHKUBO
03.06.09			89.03.21	03.06.03

MATL. SPEC. SEE TABLE 1

TREAT. & FIN.

NAME 2.3Ⅱ(090Ⅱ)4P+8.0(312)2P HYBRID
6 CONNECTOR SUB ASSEMBLY FEMALE

PART NO. CH. CODE 7283-1064 ETC.

DWG NO. 7283-1064:R

SET DWG NO.

YAZAKI CORPORATION