SUB ASSEMBLY PART NO. AND CH. CODE	NO.	PART NO. AND CH. CODE	MATERIAL	COLOR	QTY.
7282-5571-30, A	1	7182-5571-30	HPA	BLACK	1
	2	7158-4192	HPA	NATURAL	1

注 記

1. 適用端子品番 :7114-4150-02 ETC.
4. 2. 嵌合相手品番 :7283-5571-30 ETC.
5. 3. 適用ゴム栓品番:7158-3111-60 ETC.
5. 4. 適用防水栓品番:7158-3114-90

NOTES

1. APPLICABLE TERMINAL PART NO. :7114-4150-02 ETC.
4. 2. MATING PART NO. :7283-5571-30 ETC.
5. 3. APPLICABLE WIRE SEAL PART NO. :7158-3111-60 ETC.
5. 4. APPLICABLE PLUG PART NO. :7158-3114-90

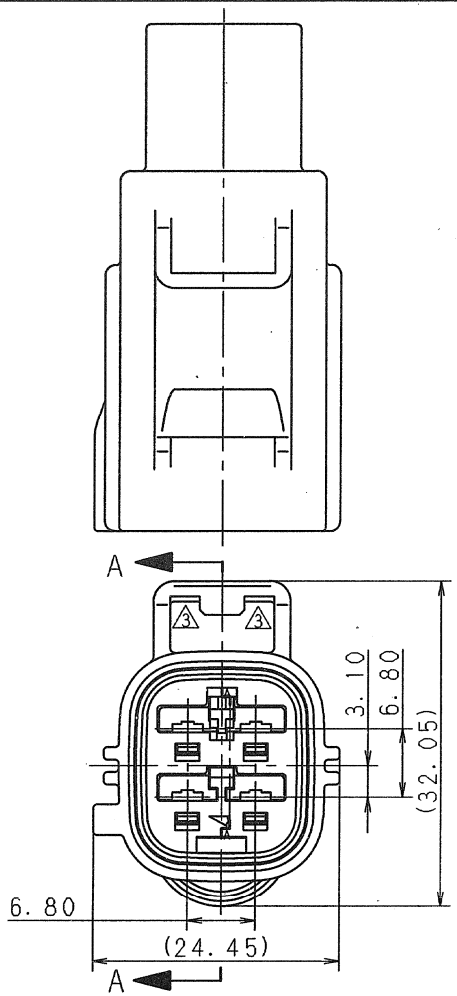

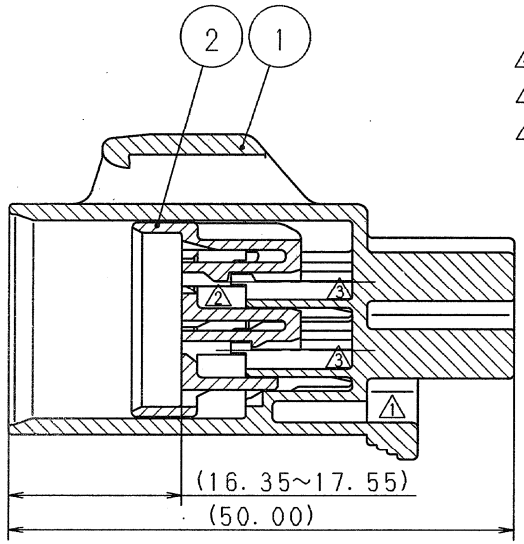

SEC. A-A

LET	DATE	REVISION RECORD	NO.	CHKD
5	99.11.22	ADDED NOTES	C99-M753	Y.I
4	99.01.07	CORRECTION	C99-6034	Y.I
3	98.05.06	CHANGED FORM ETC., A	C98-L679	H.T
2	96.10.16	CHANGED FORM	C96-M909	H.K
1	96.08.02	CHANGED FORM	C96-M442	A.Y
—	96.07.02	NEW	C96-M169	H.K

ISSUE MARK

GENERAL TOLERANCE

	10MAX	50MAX	100MAX	250MAX	2500VR	ANGLE	ECCENT
A	±0.15	±0.2	±0.3	±0.5	±0.75	±30′	0.1
B	±0.2	±0.3	±0.55	±0.95	±1.4	±30′	0.1
C	±0.3	±0.5	±0.8	±1.4	±2	±30′	0.15

SPECIFIED

MASS g

CUSTOMER

CUSTOMER PART NO. | CUSTOMER DWG NO.

OFFICE | TRIAL PART NO.

VENDOR

VENDOR NO.

DWG TYPE	DWG SOURCE	DWG DATE	UNIT	SCL	ANGLE
R	NEW	96.07.02	mm	2/1	3

APPROVED	CHECKED	CHECKED	DESIGN	DRAWN
酒井	内田	永野	Y. UCHIDA	T. YAMANE 櫻山マ
99.12.01	99.12.01	99.11.30	96.06.03	99.11.22

MATL. SPEC. SEE TABLE | TREAT. & FIN.

NAME 2.8 SYSTEM SEALED CONNECTOR 4P (M) SUB ASSEMBLY (TYPE-B)

PART NO. CH. CODE 7282-5571-30, A

DWG NO. 7282-5571-30:R | SET DWG NO.

YAZAKI CORPORATION

033 540