TABLE 1

SUB ASSEMBLY PART NO. & CH.CODE	NO.	PART NO.& CH.CODE	MATERIAL	COLOR	QTY.
△2 7282-3210-40 ETC.	①	SEE TABLE 2	PBT	SEE TABLE 2	1
	②	7158-4041	PBT	NATURAL	1

△2 TABLE 2

SUB ASSEMBLY PART NO. & CH.CODE	PART NO.& CH.CODE	COLOR
7282-3210-30	7182-3210-30	BLACK
7282-3210-40	7182-3210-40	LIGHT GRAY

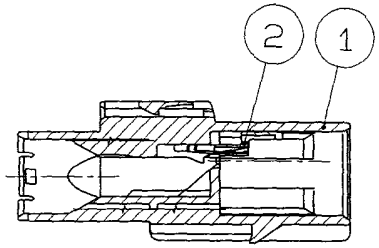

SEC.A-A

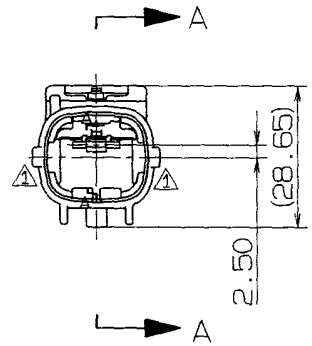

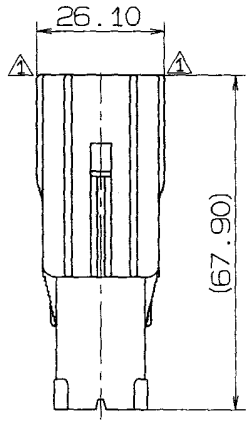

注 記

△2 1.嵌合相手品番 : 7283-3210-40 ETC.

2.適用端子品番 : 7114-3095-02

△3 3.適用ゴム栓品番: 7158-3180-80 ETC.

NOTES

△2 1.MATING PART NO. : 7283-3210-40 ETC.

2.APPLICABLE TERMINAL PART NO. : 7114-3095-02

△3 3.APPLICABLE RUBBER STOPPER NO.: 7158-3180-80 ETC.

ISSUE MARK

LET	DATE	REVISION RECORD	NO.	CHKD
△2	98.05.13	ADDED NOTES & ELIMINATED COLOR NO.	C98-L818	H.T
△1	97.07.01	CHANGED FORM	C97-M300	H.K
	97.05.06	NEW	C97-L762	H.K

GENERAL TOLERANCE

	10MAX	50MAX	100MAX	250MAX	2500VR	ANGLE	ECCENT
A	±0.15	±0.2	±0.3	±0.5	±0.75	±30'	0.1
B	±0.2	±0.3	±0.55	±0.95	±1.4	±30'	0.1
©	±0.3	±0.5	±0.8	±1.4	±2	±30'	0.15

SPECIFIED

MASS g

CUSTOMER

CUSTOMER PART NO.

CUSTOMER DWG NO.

OFFICE

TRIAL PART NO.

VENDOR

VENDOR NO.

DWG TYPE	DWG SOURCE	DWG DATE	UNIT	SCL	ANGLE
R	NEW	97.05.06	mm	1/1	3

APPROVED	CHECKED	CHECKED	DESIGN	DRAWN
加藤	山梨	多倉	TANISHITA	SAITOH 遠藤
98.05.22	98.05.21	98.05.20	96.10.14	98.05.13

MATL. SPEC. SEE TABLE 1

TREAT. & FIN.

NAME T375 1P SEALED CONNECTOR HOUSING MALE SUB ASSEMBLY

PART NO. CH. CODE △7282-3210-40 ETC.

DWG NO. △7282-3210-40: R

SET DWG NO.

YAZAKI CORPORATION