SUB ASSEMBLY PART NO. AND CH. CODE	NO.	PART NO. AND CH. CODE	MATERIAL	COLOR	QTY.
7283-1927-30, A	①	7183-1927-30	PBT	BLACK	1
	③	7137-2195-80	SILICONE RUBBER	BROWN △1	1
7283-1928-80, A	②	7183-1928-80	PBT	BROWN	1
	③	7137-2195-80	SILICONE RUBBER	BROWN △1	1

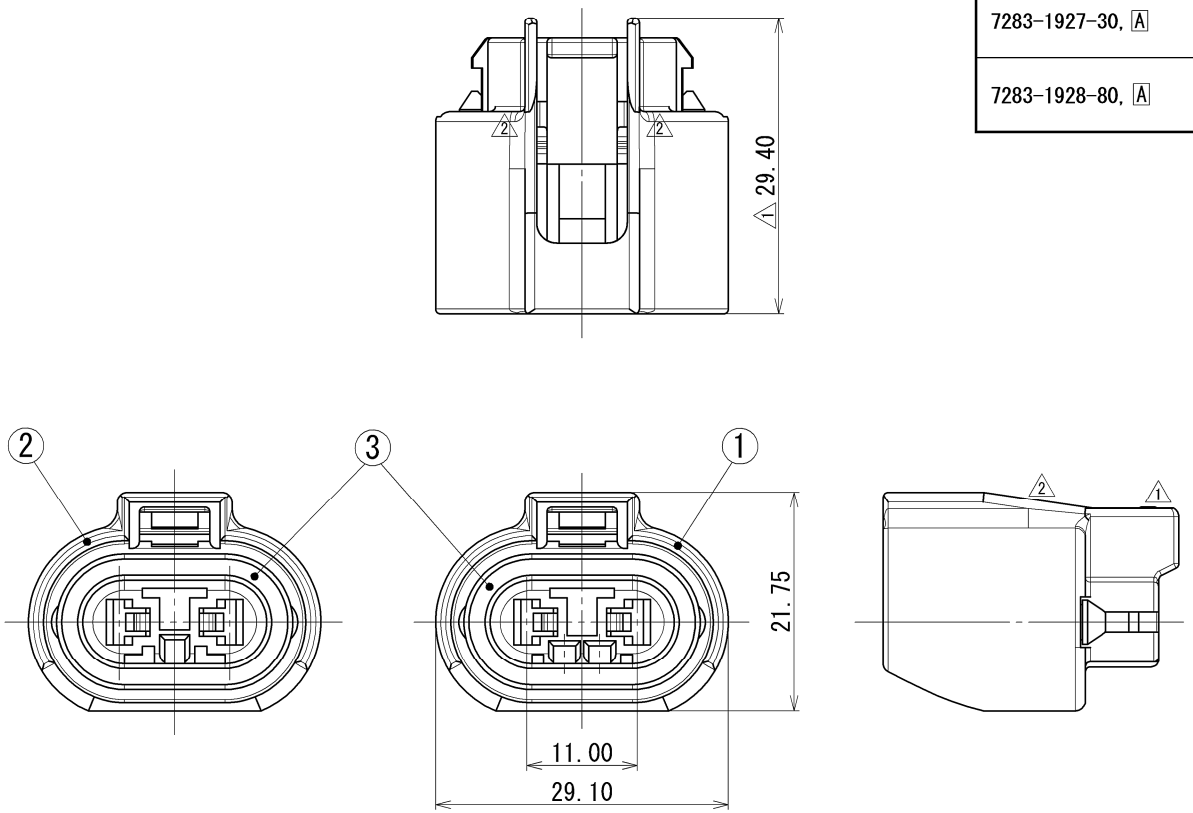

7283-1928-80　　7283-1927-30

注記

1. 適用リアホルダ品番 ：7157-6826-80
2. 適用端子品番 ：7116-1236, 7116-1237
3. 適用ゴム栓品番 ：7157-3560, 7157-3561-80
△3 4. 適用バルブ ：7283-1927-30…#9005(HB3)バルブ用
：7283-1928-80…#9006(HB4)バルブ用

NOTES

1. APPLICABLE REAR HOLDER NO. ：7157-6826-80
2. APPLICABLE TERMINAL NO. ：7116-1236, 7116-1237
3. APPLICABLE RUBBER SEAL NO. ：7157-3560, 7157-3561-80
△3 4. APPLICABLE BULB ：7283-1927-30…BULB FOR #9005(HB3)
：7283-1928-80…BULB FOR #9006(HB4)

ISSUE MARK

LET	DATE	REVISION RECORD	NO.	CHKD
△3	2014/10/09	ADDED NOTES	C14-Y120	K.U
△2	2000/12/16	CHANGED FORM	C00-M616	Y.S
△1	1999/07/21	CHANGED FORM ETC., A	C99-M176	Y.S
	1993/10/21	NEW	C93-M148	H.K

GENERAL TOLERANCE

	10MAX	50MAX	100MAX	250MAX	2500VR	ANGLE	ECCENT
A	±0.15	±0.2	±0.3	±0.5	±0.75	±30'	0.1
B	±0.2	±0.3	±0.55	±0.95	±1.4	±30'	0.1
Ⓒ	±0.3	±0.5	±0.8	±1.4	±2	±30'	0.15

SPECIFIED　　MASS

CUSTOMER
CUSTOMER PART NO.　　CUSTOMER DWG NO.
OFFICE　　TRIAL PART NO.
VENDOR
VENDOR NO.

DWG TYPE	DWG SOURCE	DWG DATE	UNIT	SCL	ANGLE
R	NEW	1993/10/21	mm	2:1	3

APPROVED	CHECKED	CHECKED	DESIGN	DRAWN
T.YAMAWAKI	K.URANO	———	YASHIMA	M.AKIYAMA
2014/10/09	2014/10/09	———	1988/11/23	2014/10/09

MATL. SPEC.: SEE TABLE　　TREAT. & FIN.

NAME: HEAD LAMP CONNECTOR SUB ASSEMBLY

PART NO. CH. CODE: 7283-1927-30 ETC.

DWG NO.: 7283-1927-30:R　　SET DWG NO.

YAZAKI CORPORATION