TABLE 1	SUB ASSEMBLY PART NO. AND CH. CODE	NO.	PART NO. AND CH. CODE	MATERIAL	COLOR	QTY.
	7282-1020 ETC.	1	SEE TABLE 2	4 HPA	SEE TABLE 2	1
2		2	7157-4091	3 HPA	NATURAL	1

TABLE 2

	SUB ASSEMBLY PART NO. AND CH. CODE	PART NO. AND CH. CODE	COLOR
	7282-1020, A (7C82-1020)	7182-1020 (7B82-1020)	NATURAL
	7282-1020-10, A	7182-1020-10	DARK GRAY
	7282-1020-30, A	7182-1020-30	BLACK
	7282-1020-40, A	7182-1020-40	LIGHT GRAY
	7282-1020-50, A	7182-1020-50	ORANGE
1	7282-1020-60, A	7182-1020-60	GREEN
4	7282-1020-70, A (7C82-1020-70)	7182-1020-70 (7B82-1020-70)	YELLOW
2	7282-1020-80, A	7182-1020-80	BROWN
	7282-1020-90, A	7182-1020-90	BLUE

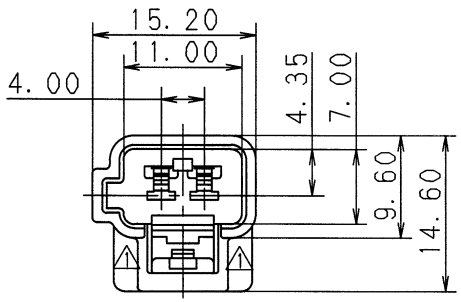

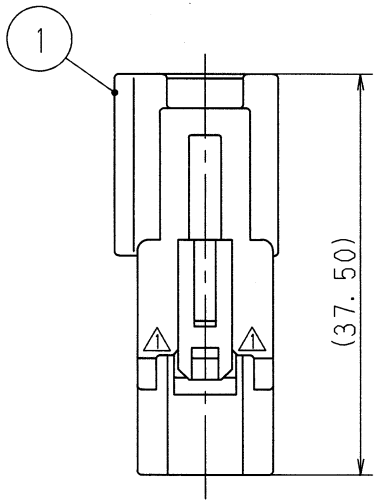

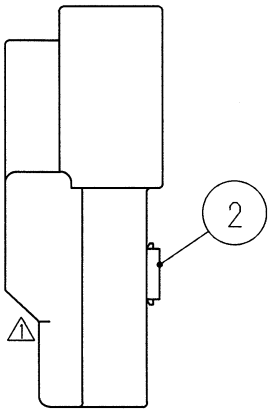

注 記

1. 嵌合相手品番： 7283-1020 ETC.
2. 適用端子品番： 7114-4020 ETC.

NOTES

1. MATING PART NO. : 7283-1020 ETC.
2. APPLICABLE TERMINAL NO. :7114-4020 ETC.

LET	DATE	REVISION RECORD	NO.	CHKD
4	00. 10. 30	ELIMINATED MATERIAL & CHANGED MATERIAL	C00-M342	Y. S
3	95. 03. 20	CHANGED MATERIAL, A	C95-L362	M. K
2	93. 10. 30	CHANGED MATERIAL & ADDED COLOR NO.	C93-P169	C. M
1	90. 05. 11	CHANGED FORM & ADDED PART NO.	C90-L468	H. Y
	88. 12. 24	NEW	C89-L003	K. J

ISSUE MARK

GENERAL TOLERANCE

	10MAX	50MAX	100MAX	250MAX	2500VR	ANGLE	ECCENT
A	±0. 15	±0. 2	±0. 3	±0. 5	±0. 75	±30′	0. 1
B	±0. 2	±0. 3	±0. 55	±0. 95	±1. 4	±30′	0. 1
C	±0. 3	±0. 5	±0. 8	±1. 4	±2	±30′	0. 15

SPECIFIED

MASS g

CUSTOMER			MATL. SPEC.	SEE TABLE 1	TREAT. & FIN.
CUSTOMER PART NO.	CUSTOMER DWG NO.		NAME	090 II 2P CONNECTOR SUB ASSEMBLY MALE	
OFFICE	TRIAL PART NO.				
VENDOR					
VENDOR NO.			PART NO. CH. CODE	7282-1020 ETC. (7C82-1020 ETC.)	

DWG TYPE	DWG SOURCE	DWG DATE	UNIT	SCL	ANGLE
R	NEW	89. 01. 13	mm	2/1	3

APPROVED	CHECKED	CHECKED	DESIGN	DRAWN
加藤	山梨	澤	Y. OHTA	FUTSUKI 杉山じ
'00. 11. 14	00. 11. 13	'00. 11. 06	88. 12. 26	00. 10. 30

DWG NO. 7282-1020:R

SET DWG NO.

YAZAKI CORPORATION