TABLE 1

| SUB ASSEMBLY PART NO. AND CH. CODE | NO. | PART NO. AND CH. CODE | MATERIAL | COLOR | ⚠QTY. |
|---|---|---|---|---|---|
| 7282-1010 ETC. | ① | SEE TABLE 2 | ③HPA | SEE TABLE 2 | 1 |
| | ② | 7157-4088 ⚠(7B57-4088) | ③HPA | NATURAL | 1 |

④TABLE 2

| SUB ASSEMBLY PART NO. AND CH. CODE | PART NO. AND CH. CODE | COLOR |
|---|---|---|
| 7282-1010, Ⓒ ⚠(7C82-1010) | 7182-1010 ⚠(7B82-1010) | NATURAL |
| 7282-1010-10, Ⓒ | 7182-1010-10 | DARK GRAY |
| 7282-1010-30, Ⓒ | 7182-1010-30 | BLACK |
| 7282-1010-40, Ⓒ | 7182-1010-40 | LIGHT GRAY |
| 7282-1010-50, Ⓒ | 7182-1010-50 | ORANGE |
| 7282-1010-90, Ⓒ | 7182-1010-90 | BLUE |

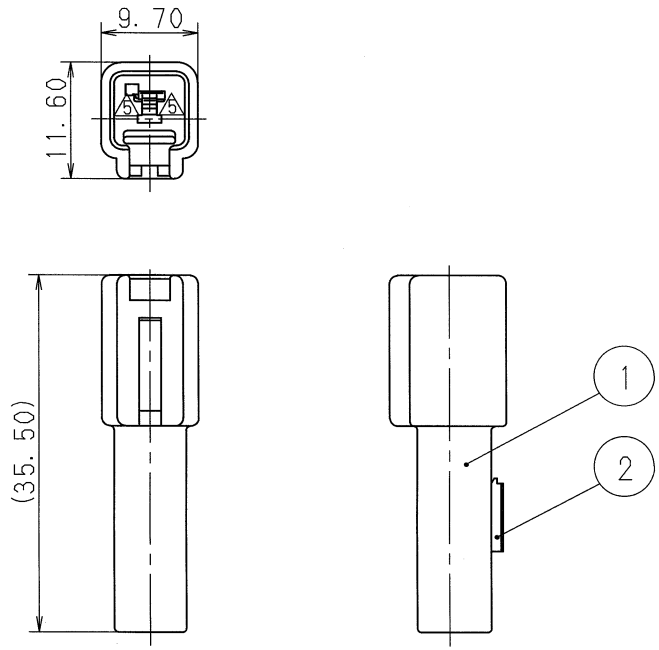


注 記

⑤ 1. 適用端子品番：7114-4020 ETC.

⚠ 2. ( ) 内品番は、エアバック (A/B) 回路及び特別管理回路に使用する時に適用すること。

⚠ 3. 嵌合相手品番：7283-1010 ETC.

NOTES

⑤ 1. APPLICABLE TERMINAL NO. :7114-4020 ETC.

⚠ 2. PART NUMBERS IN PARENTHESIS SHALL BE USED FOR AIR BAG (A/B) CIRCUITS AND OTHER CIRCUITS DESIGNATED FOR SPECIAL MONITORING.

⚠ 3. MATING PART NO. :7283-1010 ETC.

| LET | DATE | REVISION RECORD | NO. | CHKD |
|---|---|---|---|---|
| ⑤ | 03.03.20 | CORRECT ALL ERROR | C03-X211 | H.T |
| ④ | 98.12.17 | CHANGED NOTE & ELIMINATED COLOR NO. | C98-N160 | T.M |
| ③ | 97.07.08 | CHANGED MATERIAL, Ⓒ | C97-M293 | H.K |
| ② | 97.03.10 | CHANGED MATERIAL, Ⓑ | C97-L457 | H.K |
| ⚠ | 97.02.17 | CHANGED MATERIAL & ADDED A/B PART NO., Ⓐ | C97-L063 | H.K |
| | 92.09.15 | NEW | C92-6892 | T.M |

GENERAL TOLERANCE

| | 10MAX | 50MAX | 100MAX | 250MAX | 2500VR | ANGLE | ECCENT |
|---|---|---|---|---|---|---|---|
| A | ±0.15 | ±0.2 | ±0.3 | ±0.5 | ±0.75 | ±30′ | 0.1 |
| B | ±0.2 | ±0.3 | ±0.55 | ±0.95 | ±1.4 | ±30′ | 0.1 |
| Ⓒ | ±0.3 | ±0.5 | ±0.8 | ±1.4 | ±2 | ±30′ | 0.15 |

SPECIFIED

MASS g

ISSUE MARK

CUSTOMER

CUSTOMER PART NO. | CUSTOMER DWG NO.

OFFICE | TRIAL PART NO.

VENDOR

VENDOR NO.

| DWG TYPE | DWG SOURCE | DWG DATE | UNIT | SCL | ANGLE |
|---|---|---|---|---|---|
| R | NEW | 92.09.15 | mm | ⚠2/1 | 3 |

| APPROVED | CHECKED | CHECKED | DESIGN | DRAWN |
|---|---|---|---|---|
| 川上円 | 石田 | | K. JINNO | M. TAKEUCHI 田中U |
| '03.3.26 | 03.03.26 | | 89.02.02 | 03.03.20 |

MATL. SPEC. SEE TABLE 1 | TREAT. & FIN.

NAME ⑤ 2.3Ⅱ (090Ⅱ) 1P CONNECTOR

SUB ASSEMBLY MALE

PART NO. CH. CODE ⚠ 7282-1010 ETC. (7C82-1010)

DWG NO. 7282-1010:R | SET DWG NO.

YAZAKI CORPORATION