GENERAL TOLERANCE											
	10 MAX	50 MAX	100 MAX	250 MAX	250 OVR	R5 MAX	R10 MAX	R20 MAX	R20 OVR	ANGLE	ECCENT
A	±0.15	±0.2	±0.3	±0.5	±0.75					±3°	0.1
B	±0.2	±0.3	±0.55	±0.95	±1.4	±0.2	±0.3	±0.5	±2.5	±3°	0.1
C	±0.3	±0.5	±0.8	±1.4	±2					±3°	0.15

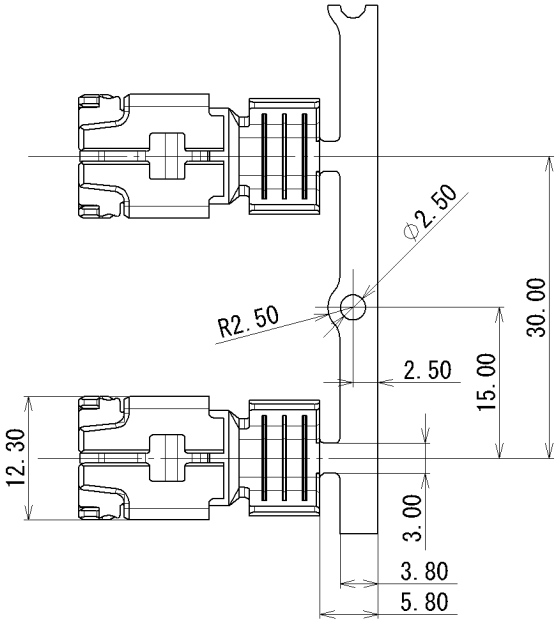

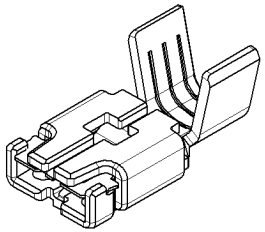

REFERENCE

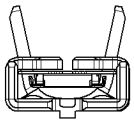

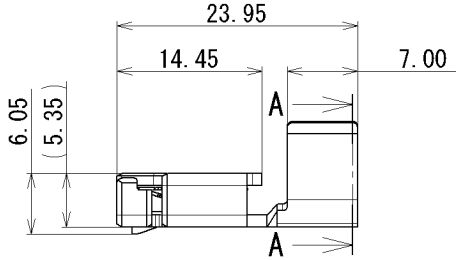

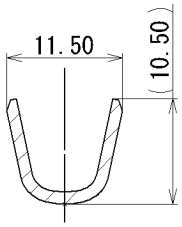

SEC. A-A

注記

1. 適用コネクタ品番:7225-5234-5W,嵌合相手品番:7325-5232-5W
2. 適用電線:EEX12f,15f 相当

NOTES

1. APPLICABLE CONNECTOR No.:7225-5234-5W
   MATCHING PART No.:7325-5232-5W
2. APPLICABLE WIRE SIZE : EEX12f,15f CORRESPONDING.

ISSUE MARK

LET	DATE	REVISION RECORD	NO.	CHKD
	2012/10/04	NEW	C12-M765	H.F

GENERAL TOLERANCE							
	10MAX	50MAX	100MAX	250MAX	250OVR	ANGLE	ECCENT
A	±0.15	±0.2	±0.3	±0.5	±0.75	±30'	0.1
B	±0.2	±0.3	±0.55	±0.95	±1.4	±30'	0.1
C	±0.3	±0.5	±0.8	±1.4	±2	±30'	0.15

SPECIFIED

MASS

CUSTOMER	
CUSTOMER PART NO.	CUSTOMER DWG NO.
OFFICE	TRIAL PART NO.
VENDOR	
VENDOR NO.	

DWG TYPE	DWG SOURCE	DWG DATE	UNIT	SCL	ANGLE
R	NEW	2012/10/04	mm	2:1	3

APPROVED	CHECKED	CHECKED	DESIGN	DRAWN
Y. FURUYA	K. SAITO	Y. KIKUCHI	S. NOGASHIRA	H. FUNADA
2012/10/04	2012/10/04	2012/10/04	2011/12/14	2012/10/04

MATL. SPEC. COPPER ALLOY (SPRING:SUS)

TREAT. & FIN. TIN PLATING

NAME 9.5 TERMINAL FEMALE (SUS SPRING TYPE)

PART NO. CH. CODE 7225-5316-02

DWG NO. 7225-5316-02:R

SET DWG NO.

YAZAKI CORPORATION