SUB ASSEMBLY PART NO. AND CH. CODE	NO.	PART NO.	PART NAME	MATL&SPEC	COLOR	QTY.
7223-6055-30	1	7123-6055-30	⚠2 LOCKING LEG TYPE ISO RELAY HOUSING 5P (F)	PBT	BLACK	1
	2	7157-6215-40	LOCKING LEG TYPE ISO RELAY REAR HOLDER 5P (F)	PBT	LIGHT GRAY	1

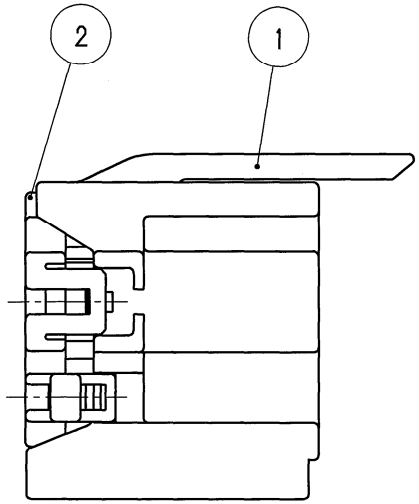

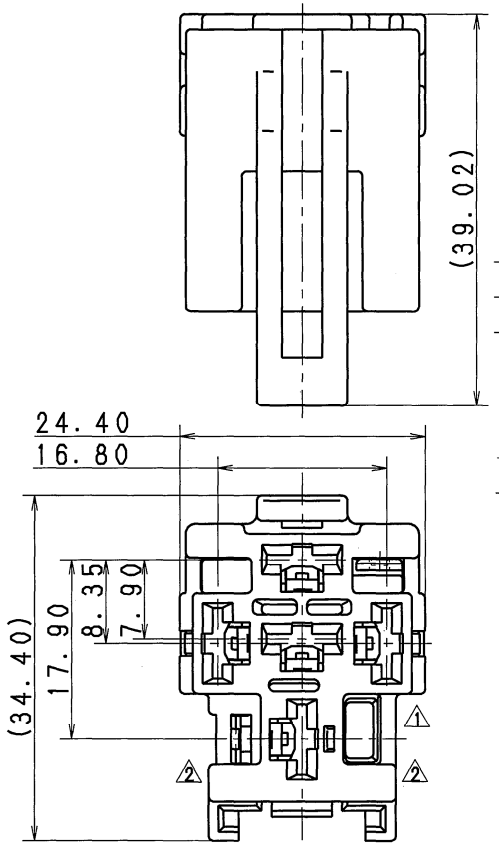

NOTE

1. APPLICABLE TERMINAL NO. :7116-2870, 7116-2871, 7116-2872

注記

1. 適用端子品番:7116-2870, 7116-2871, 7116-2872

ISSUE MARK

LET	DATE	REVISION RECORD	NO.	CHKD
⚠2	12. 05. 25	CHANGED FORM, ETC.	C12-Z502	A. Q
⚠1	92. 09. 03	CHANGED FORM	C92-6853	T. H
	92. 06. 23	N E W	C92-6561	K. S

GENERAL TOLERANCE

	10MAX	50MAX	100MAX	250MAX	2500VR	ANGLE	ECCENT
A	±0. 15	±0. 2	±0. 3	±0. 5	±0. 75	±30′	0. 1
B	±0. 2	±0. 3	±0. 55	±0. 95	±1. 4	±30′	0. 1
©	±0. 3	±0. 5	±0. 8	±1. 4	±2	±30′	0. 15

SPECIFIED

MASS

CUSTOMER

CUSTOMER PART NO.

CUSTOMER DWG NO.

OFFICE

TRIAL PART NO.

VENDOR

VENDOR NO.

DWG TYPE	DWG SOURCE	DWG DATE	UNIT	SCL	ANGLE
R	NEW	92. 06. 23	mm	2/1	3

APPROVED	CHECKED	CHECKED	DESIGN	DRAWN
M. KASHIYAMA	T. KOBAYASHI	T. WATANABE	SADAISHI	A. QUIROL
12. 05. 25	12. 05. 25	12. 05. 25	92. 02. 27	12. 05. 25

MATL. SPEC. SEE TABLE

TREAT. & FIN.

NAME ⚠2LOCKING LEG TYPE ISO RELAY HOUSING 5P FEMALE SUB ASSEMBLY

PART NO. CH. CODE 7223-6055-30

DWG NO. 7223-6055-30:R

SET DWG NO.

YAZAKI CORPORATION