© COPYRIGHT: THIS DRAWING HAS COPYRIGHT AND MAY NOT BE COPIED IN WHOLE OR IN PART OR USED FOR ANY PURPOSE OTHER THAN FOR WHICH IT IS SUPPLIED WITHOUT WRITTEN PERMISSION OF YAZAKI EUROPE LIMITED

SEALED TERMINAL

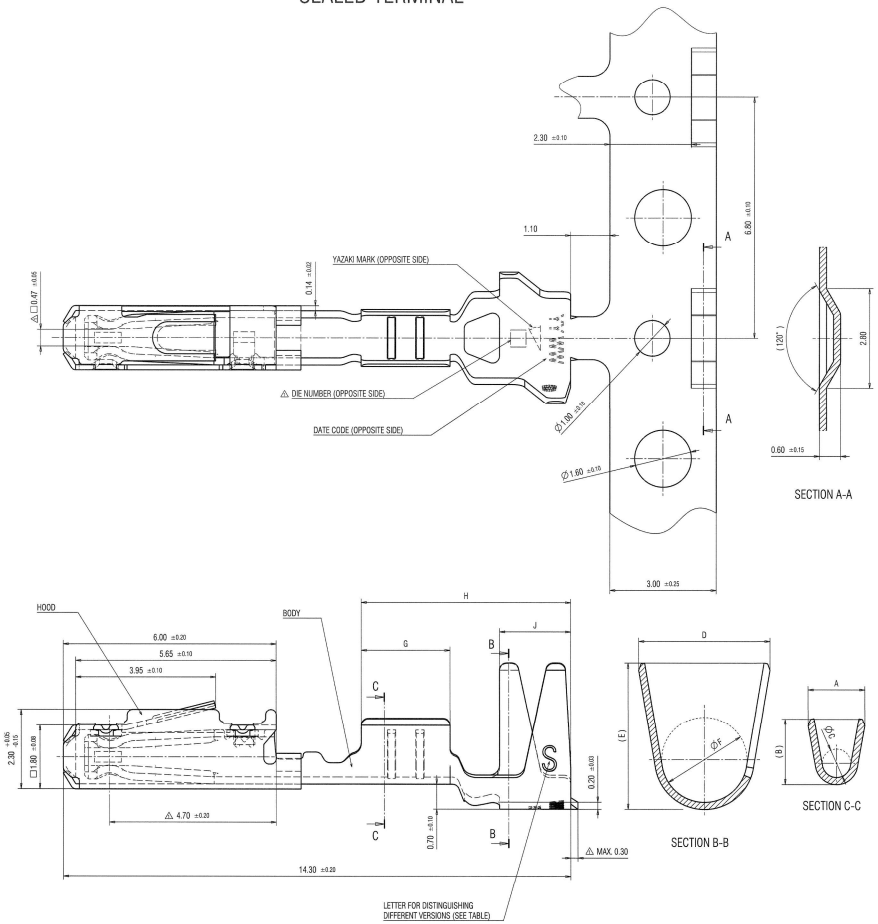

UNSEALED TERMINAL

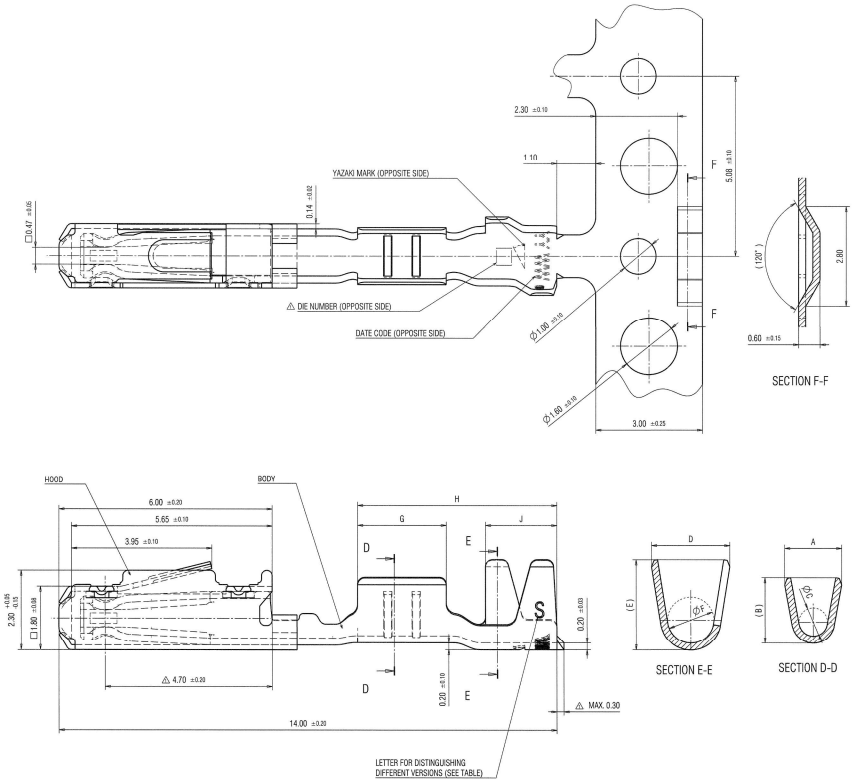

NOTES:

1. MATERIAL
   BODY: CuNiSi
   HOOD: X10CrNi 18-8;
2. APPLICABLE SEALS: SEE TABLE;
3. MATING PRODUCT ACCORDING DRAWING: T.B.D.;
4. FOR GENERAL GEOMETRICAL TOLERANCE SEE TABLE (ECCENT=ECCENTRICITY);
5. HANDLING MANUAL: YPES-15-1532E;
6. △ PRODUCT STANDARD: YPES-11-04-290E.
7. THE MATERIALS USED IN THIS PRODUCT ARE IN CONFORMITY WITH REQUIREMENTS OF EU ELV 2000/53/EC DIRECTIVE AND ASSOCIATED DOCUMENTS

	SUBASSY NO.	WIRE RANGE (mm²)	PLATING	LETTER	A	B	C	D	E	F	G	H	J	MASS [g]	SUITABLE SINGLE-WIRE-SEALS (CAVITY DIAMETER 3.45mm) △
UNSEALED △	7216-7771-02	0.13-0.17	TIN PLATING HOT DIPPED 1 - 3 μm	S	1.31±0.20	1.50	0.40±0.20	1.90±0.20	1.85	0.96±0.20	3.00±0.10	6.20±0.20	1.80±0.10	0.117	N/A
UNSEALED △	7216-7771-08		SELECTIVE GOLD PLATING MIN. 0.8 μm ON CONTACT AREA	X											
UNSEALED	7216-7772-02	△ 0.35	TIN PLATING HOT DIPPED 1 - 3 μm	S	1.60±0.30	1.85	0.80±0.20	2.20±0.30	2.40	1.30±0.20	2.50±0.10	5.60±0.20	2.00±0.20	0.119	
UNSEALED	7216-7772-08		SELECTIVE GOLD PLATING MIN. 0.8 μm ON CONTACT AREA	X											
UNSEALED △	7216-7772-06		SELECTIVE SILVER PLATING 1-2 μm ON CONTACT AREA	L											
UNSEALED	7216-7773-02	0.50 - 0.75	TIN PLATING HOT DIPPED 1 - 3 μm	S	1.85±0.30	2.20	1.00±0.20	2.65±0.30	2.80	1.60±0.20	2.80±0.10	5.60±0.20	1.80±0.20	0.125	
UNSEALED	7216-7773-08		SELECTIVE GOLD PLATING MIN. 0.8 μm ON CONTACT AREA	X											
UNSEALED △	7216-7773-06		SELECTIVE SILVER PLATING 1-2 μm ON CONTACT AREA	L											
SEALED △	7296-0787-02	0.13 - 0.17	TIN PLATING HOT DIPPED 1 - 3 μm	S	1.31±0.30	1.50	0.40±0.20	3.70±0.30	4.15	2.4±0.20	2.50±0.10	5.90±0.20	2.00±0.20	0.1258	△ 7172-5568-70
SEALED △	7296-0787-08		SELECTIVE GOLD PLATING MIN. 0.8 μm ON CONTACT AREA	X											
SEALED △	7296-0787-06		SELECTIVE SILVER PLATING 1-2 μm ON CONTACT AREA	L											
SEALED	7216-7775-02	△ 0.35	TIN PLATING HOT DIPPED 1-3 μm	S	1.60±0.30	1.85	0.80±0.20							0.1302	
SEALED	7216-7775-08		SELECTIVE GOLD PLATING MIN. 0.8 μm ON CONTACT AREA	X											
SEALED △	7216-7775-06		SELECTIVE SILVER PLATING 1-2 μm ON CONTACT AREA	L											
SEALED	7216-7776-02	0.50 - 0.75	TIN PLATING HOT DIPPED 1-3 μm	S	1.85±0.30	2.35	1.00±0.20				2.80±0.10	6.20±0.20		0.136	△ 7172-5570-60
SEALED	7216-7776-08		SELECTIVE GOLD PLATING MIN. 0.8 μm ON CONTACT AREA	X											
SEALED	7216-7776-06		SELECTIVE SILVER PLATING 1-2 μm ON CONTACT AREA	L											

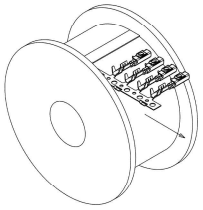

FEED DIRECTION
(SCALE 2:1)

ISO VIEW
(SCALE 1:1)

△	24.03.2017.	CHANGED NOTES & ADDED PART NUMBERS.	Y17-0280	IJ
—	03.07.2015.	NEW	Y15-0317	JJ
LET	DATE	REVISION RECORD	NO.	CHKD

PRINTED COPIES ARE UNCONTROLLED. THEY ARE POTENTIALLY OUT-OF-DATE AND INVALID. DATABASE IS MASTER.

GENERAL TOLERANCE							
	10MAX	50MAX	100MAX	250MAX	250OVR	ANGLE	ECCENT
A	±0.15	±0.2	±0.3	±0.5	±0.75	±30'	0.1
B	±0.2	±0.3	±0.55	±0.95	±1.4	±30'	0.1
(C)	±0.3	±0.5	±0.8	±1.4	±2	±30'	0.15
SPECIFIED						MASS	SEE TABLE

CUSTOMER							
CUSTOMER PART NO.		CUSTOMER DWG NO.					
OFFICE YEL-K		TRIAL PART NO.					
VENDOR							
VENDOR NO.							
DWG TYPE	DWG SOURCE	DWG DATE	UNIT	SCL	ANGLE		
B	NEW	03.07.2015.	mm	20/1	3		
APPROVED	CHECKED	CHECKED	DESIGN	DRAWN			
G.GREGURIĆ	I.JAKOPLIĆ	A.BUCEVIĆ	M.SPRLJAN	H.JAKLENEC			
		24.03.2017	21.03.2017	28.02.2015	24.03.2017		

MATL-SPEC.	SEE NOTES	TREAT. & FIN.	SEE TABLE
NAME	0.63 CONTACT SYSTEM (YMT) FEMALE TERMINAL SEALED/UNSELAED		
PART NO. CH. CODE	7216-7772-02, ETC.		
DWG NO.	7216-7772-02:H		SET DWG NO.

ISSUE MARK

YAZAKI

A0