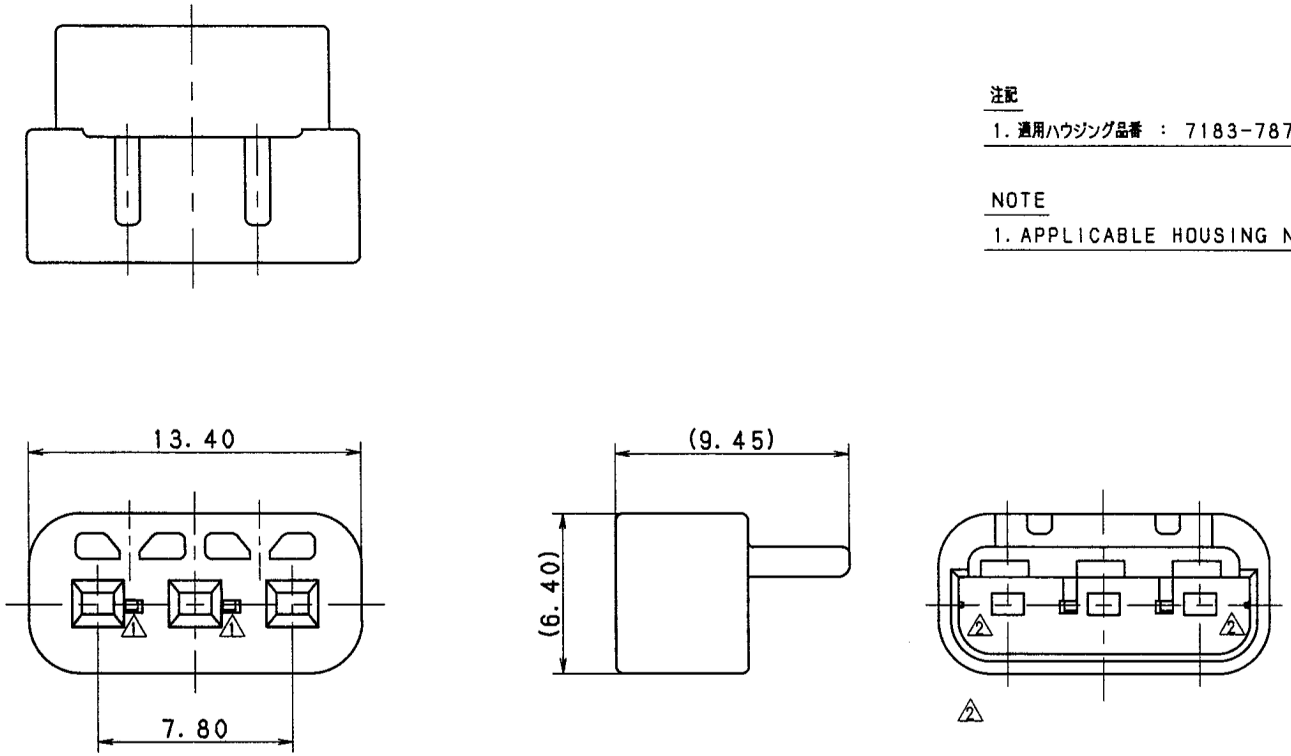

注記

1. 適用ハウジング品番 ： 7183-7874-30

NOTE

1. APPLICABLE HOUSING NO. : 7183-7874-30

LET	DATE	REVISION RECORD	NO.	CHKD
2	98.12.03	CHANGED FORM. B	C98-M870	M.F
1	98.05.26	CHANGED FORM. A	C98-L890	K.U
	98.02.12	NEW	C98-L279	M.T

GENERAL TOLERANCE

	10MAX	50MAX	100MAX	250MAX	2500VR	ANGLE	ECCENT
A	±0.15	±0.2	±0.3	±0.5	±0.75	±30′	0.1
B	±0.2	±0.3	±0.55	±0.95	±1.4	±30′	0.1
C	±0.3	±0.5	±0.8	±1.4	±2	±30′	0.15

SPECIFIED

MASS g

CUSTOMER

CUSTOMER PART NO. | CUSTOMER DWG NO.

OFFICE | TRIAL PART NO.

VENDOR

VENDOR NO.

DWG TYPE	DWG SOURCE	DWG DATE	UNIT	SCL	ANGLE
R	NEW	98.02.12	mm	5/1	3

APPROVED	CHECKED	CHECKED	DESIGN	DRAWN
辻 98.12.09	杉山 98.12.09	稲井 '98.12.09	M. TSUJI 97.07.07	YOSHIDA 伊藤 98.11.20

MATL. SPEC. PBT (NATURAL) | TREAT. & FIN.

NAME RK-TYPE CONNECTOR 3PF (B, G) FRONT HOLDER

PART NO. CH. CODE 7158-4892, B 2

DWG NO. 7158-4892:R | SET DWG NO.

YAZAKI CORPORATION

ISSUE MARK