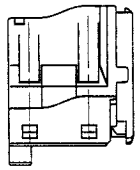

注記

1. 嵌合ハウジング品番 ： 7222-7564 ETC. 7123-7564 ETC.
2. 嵌合コルゲート・チューブの呼び径は、φ15とする。

NOTES

1. MATING HOUSING NO. 7222-7564 ETC. 7123-7564 ETC.
2. MATING CORRUGATED TUBE'S DIAMETER IS CALLED "φ15".

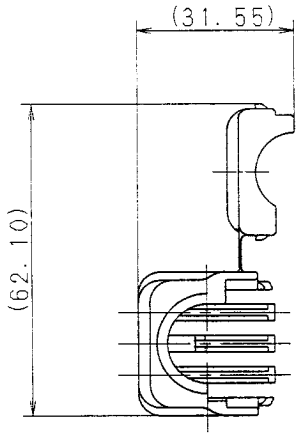

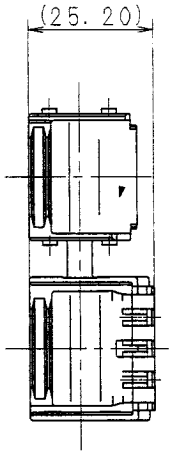

LET	DATE	REVISION RECORD	NO.	CHKD
	99.06.11	NEW	C99-L836	K.M

GENERAL TOLERANCE

	10MAX	50MAX	100MAX	250MAX	2500VR	ANGLE	ECCENT
A	±0.15	±0.2	±0.3	±0.5	±0.75	±30′	0.1
B	±0.2	±0.3	±0.55	±0.95	±1.4	±30′	0.1
(C)	±0.3	±0.5	±0.8	±1.4	±2	±30′	0.15

SPECIFIED

MASS g

CUSTOMER

CUSTOMER PART NO.

CUSTOMER DWG NO.

OFFICE

TRIAL PART NO.

VENDOR

VENDOR NO.

DWG TYPE	DWG SOURCE	DWG DATE	UNIT	SCL	ANGLE
R	NEW	99.06.11	mm	1/1	3

APPROVED	CHECKED	CHECKED	DESIGN	DRAWN
神田	稲葉	工藤	SHINJI	YAMAMOTO 森下
99.06.21	99.06.11	99.06.11	94.01.25	99.06.11

MATL. SPEC. PBT (BLACK)

TREAT. & FIN.

NAME SWP 16P REAR HOLDER COVER (WITH CORRUGATED TUBE)

PART NO. CH. CODE 7157-7918-30

DWG NO. 7157-7918-30:R

SET DWG NO.

YAZAKI CORPORATION

ISSUE MARK