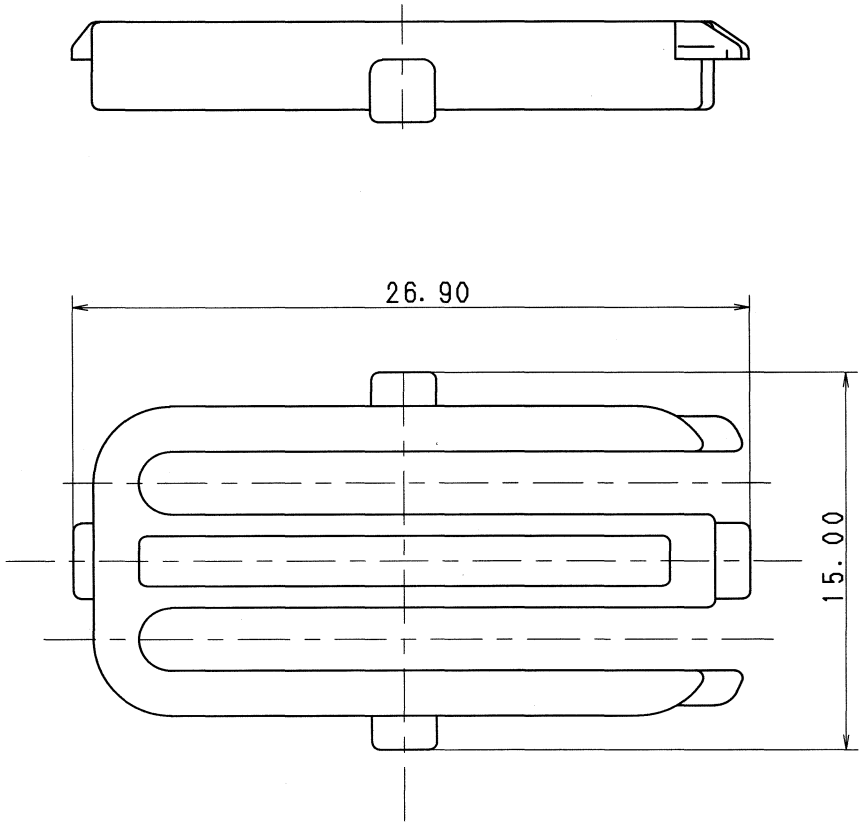


⚠ 注記

1. 本部品は，部品番号7222-7484-40(-30)
及び、7123-7484-40(-30)に装着される。

⚠ NOTE

1. THIS PART SHALL BE ASSEMBLED TO 7222-7484-40(-30)
AND 7123-7484-40(-30).

ISSUE MARK

| LET | DATE | REVISION RECORD | NO. | CHKD |
|---|---|---|---|---|
| ⚠ | 05/09/16 | ADDED TOLERANCE, ETC. | C05-ZD08 | S. T |
| | 87/09/08 | NEW | 7MC-0508 | S. Y |

GENERAL TOLERANCE

| | 10MAX | 50MAX | 100MAX | 250MAX | 2500VR | ANGLE | ECCENT |
|---|---|---|---|---|---|---|---|
| A | ±0.15 | ±0.2 | ±0.3 | ±0.5 | ±0.75 | ±30′ | 0.1 |
| B | ±0.2 | ±0.3 | ±0.55 | ±0.95 | ±1.4 | ±30′ | 0.1 |
| Ⓒ | ±0.3 | ±0.5 | ±0.8 | ±1.4 | ±2 | ±30′ | 0.15 |

SPECIFIED

MASS g

CUSTOMER

CUSTOMER PART NO.

CUSTOMER DWG NO.

OFFICE

TRIAL PART NO.

VENDOR

VENDOR NO.

| DWG TYPE | DWG SOURCE | DWG DATE | UNIT | SCL | ANGLE |
|---|---|---|---|---|---|
| R | NEW | 87/09/08 | mm | 5:1 | 3 |

| APPROVED | CHECKED | CHECKED | DESIGN | DRAWN |
|---|---|---|---|---|
| 小川 | 渡辺(信) | 小林 | YAMADA | O. DAR KOMEL GALIZA |
| '05. 9. 21 | '05. 09. 19 | '05. 9. 19 | 87/06/01 | 05/09/16 |

MATL. SPEC. PBT (BROWN)

TREAT. & FIN.

NAME SWP-TYPE CONNECTOR

REAR HOLDER 8P

PART NO. 7157-7817-80

CH. CODE

DWG NO. 7157-7817-80:R

SET DWG NO.

YAZAKI CORPORATION