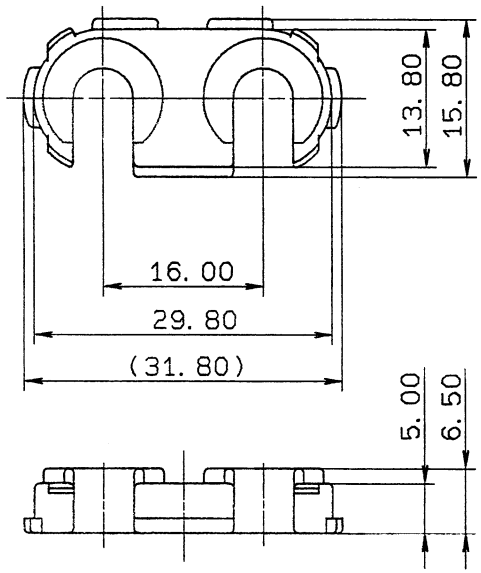

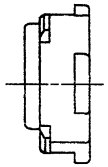

NOTE

1. APPLICABLE HOUSING NO. :7222-4220-40

注 記

1. 適用ハウジング品番:7222-4220-40

ISSUE MARK

LET	DATE	REVISION RECORD	NO.	CHKD
	89. 05. 15	N E W	C89-L620	S. K

GENERAL TOLERANCE

	10MAX	50MAX	100MAX	250MAX	2500VR	ANGLE	ECCENT
A	±0. 15	±0. 2	±0. 3	±0. 5	±0. 75	±30'	0. 1
B	±0. 2	±0. 3	±0. 55	±0. 95	±1. 4	±30'	0. 1
©	±0. 3	±0. 5	±0. 8	±1. 4	±2	±30'	0. 15

SPECIFIED

WEIGHT g

CUSTOMER

CUSTOMER PART NO. | CUSTOMER DWG NO.

OFFICE | STDLIB NO.

VENDOR

VENDOR NO.

DWG TYPE	DWG SOURCE	DWG DATE	UNIT	SCL	ANGLE
R	NEW	89. 05. 24	mm	2/1	3

APPROVED	CHECKED	CHECKED	DESIGN	DRAWN
K. Sato 89.05.30		S. Kozono 89.05.30	S. KOZONO 89. 05. 08	S. YAGI 89. 05. 24

MATL. PBT(BROWN)

SPEC.

TREAT. & FIN.

NAME Y TYPE CONNECTOR 2P

REAR HOLDER FOR MALE

PART NO. 7157-6800-80

DWG NO. 7157-6800-80:R

TRIAL PART NO.

YAZAKI CORPORATION