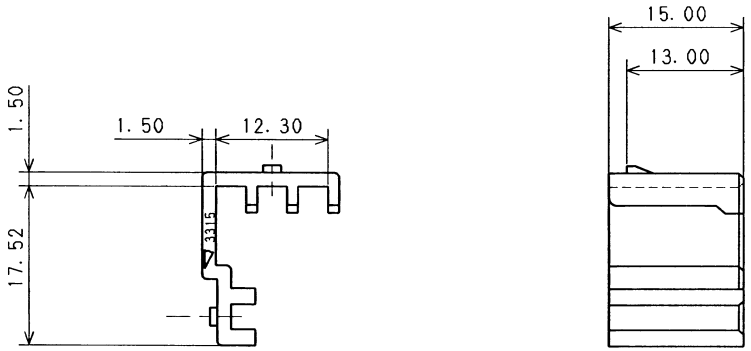

NOTE

1) MATING PART : 7154-1185 (MAIN HOUSING P. N. B.)
2) MATERIAL : PBT (NATURAL)
YPES-25-02-123 OR HOECHST CELANESE 401 AC

ISSUE MARK

LET	DATE	REVISION RECORD	NO.	CHKD
	04. 07. 12	NEW	C04-AA12	L. M.

GENERAL TOLERANCE

	10MAX	50MAX	100MAX	250MAX	2500VR	ANGLE	ECCENT
A	±0. 15	±0. 2	±0. 3	±0. 5	±0. 75	±30′	0. 1
B	±0. 2	±0. 3	±0. 55	±0. 95	±1. 4	±30′	0. 1
©	±0. 3	±0. 5	±0. 8	±1. 4	±2	±30′	0. 15

SPECIFIED

WEIGHT 2 g

CUSTOMER
CUSTOMER PART NO.
CUSTOMER DWG NO.
OFFICE YNA
TRIAL PART NO. 7F9157-A160
VENDOR
VENDOR NO.

DWG TYPE	DWG SOURCE	DWG DATE	UNIT	SCL	ANGLE
R	NEW	04. 07. 12	mm	2/1	3

APPROVED	CHECKED	CHECKED	DESIGN	DRAWN
07/12/04		7/12/04	Y. SUZUKI 05. 05. 92	04.07.12

MATL. SPEC. SEE NOTE 2)
TREAT. & FIN.
NAME MICRO ISO RELAY HOLDER (P. N. B.)
PART NO. 7154-3315
DWG NO. 7154-3315:R
YAZAKI CORPORATION

A3