NOTES

1) APPRICABLE WIRE SIZE ARE AVS0.2H TO AVS0.5.

注 記

1) 適用電線サイズハ AVS0.2H~AVS0.5デアル.

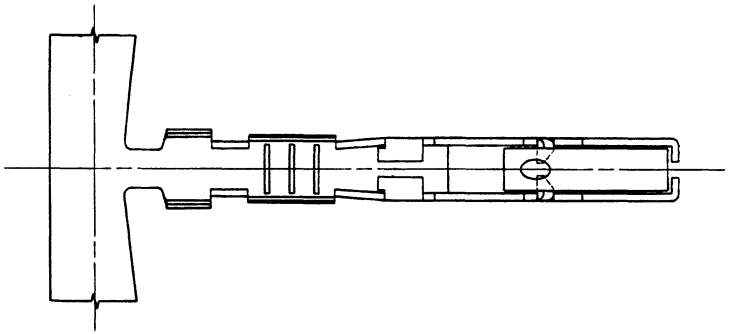

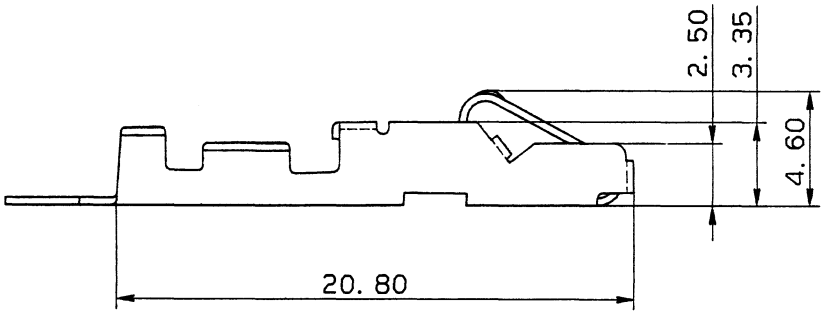

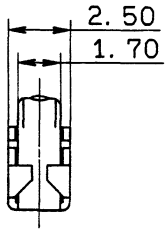

ISSUE MARK

LET	DATE	REVISION RECORD	NO.	CHKD
⚠	90.01.30	一般公差追加	C90-6115	T.T
	88.11.29	NEW	8MC-1653	A.H

GENERAL TOLERANCE

	10MAX	50MAX	100MAX	250MAX	2500VR	ANGLE	ECCENT
A	±0.15	±0.2	±0.3	±0.5	±0.75	±30'	0.1
B	±0.2	±0.3	±0.55	±0.95	±1.4	±30'	0.1
C	±0.3	±0.5	±0.8	±1.4	±2	±30'	0.15

⚠ WEIGHT g

CUSTOMER

CUSTOMER PART NO. | CUSTOMER DWG NO.

OFFICE | STDLIB NO.

VENDOR

VENDOR NO.

DWG TYPE	DWG SOURCE	DWG DATE	UNIT	SCL	ANGLE
R	NEW	88.11.29	mm	5/1	3

APPROVED	CHECKED	CHECKED	DESIGN	DRAWN
吉原		石川	MAKITA	高橋
'90.2.13		90.2.6	86.05.23	90.01.30

MATL. スズメッキ1μm以上 SPEC. KLF-5 t=0.3

TREAT. & FIN.

NAME FPC TERMINAL

PART NO. 7125-1481

DWG NO. 7125-1481:R

TRIAL PART NO.

YAZAKI CORPORATION