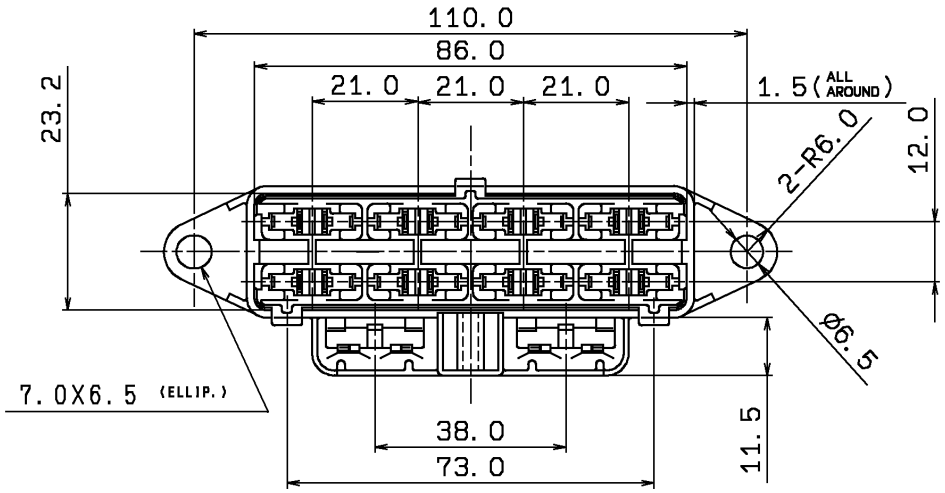

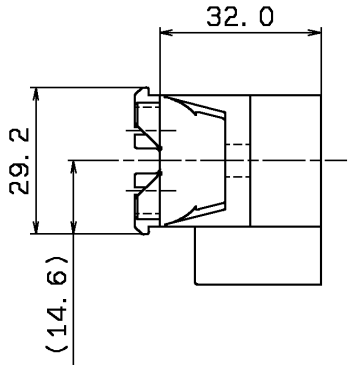

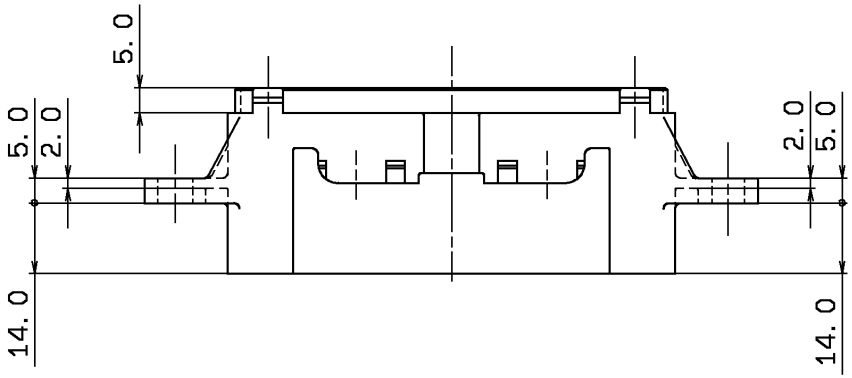

ISSUE MARK

	97.01.27	NEW	C97-3047	I.A	
LET	DATE	REVISION RECORD	NO.	CHKD	

GENERAL TOLERANCE

	10MAX	50MAX	100MAX	250MAX	2500VR	ANGLE	ECCENT
A	±0.15	±0.2	±0.3	±0.5	±0.75	±30'	0.1
B	±0.2	±0.3	±0.55	±0.95	±1.4	±30'	0.1
Ⓒ	±0.3	±0.5	±0.8	±1.4	±2	±30'	0.15

SPECIFIED

MASS 30.0 g

CUSTOMER				
CUSTOMER PART NO.		CUSTOMER DWG NO.		
OFFICE		TRIAL PART NO.		
VENDOR		7F8924-T036		
VENDOR NO.				

DWG TYPE	DWG SOURCE	DWG DATE	UNIT	SCL	ANGLE
R	NEW	97.01.27	mm	1/1	3

APPROVED	CHECKED	CHECKED	DESIGN	DRAWN
小野	佐藤	木村	MATSUKAWA	ASAI
97.01.27	97.01.27	97.01.27	89.03.28	97.01.27

MATL. SPEC. PA (BLACK)

TREAT. & FIN.

NAME FUSE BLOCK

PART NO. / CH. CODE 7124-8740

DWG NO. 7124-8740:R

SET DRW NO.

YAZAKI CORPORATION