⚠1 PART NO. AND CH. CODE	COLOR
7123-8345	NATURAL
7123-8345-30	BLACK
7123-8345-60	GREEN

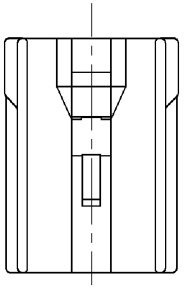

注記

⚠1 1. かん合相手は、7122-8345 ETC.

2. 使用ターミナルは、7116-1473, 7116-1473-08
7116-1474, 7116-1474-08

NOTES

⚠2 ⚠1 1. MATING PART NO. :7122-8345 ETC.

⚠2 2. APPLICABLE TERMINAL PART NO. :7116-1473, 7116-1473-08
7116-1474, 7116-1474-08

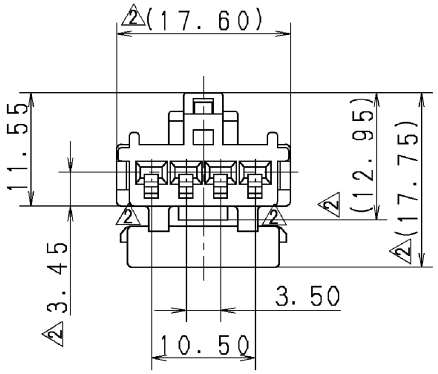

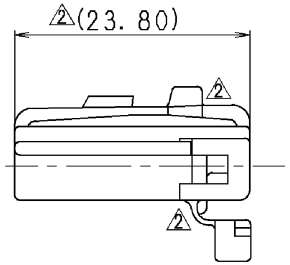

LET	DATE	REVISION RECORD	NO.	CHKD
⚠3	10/11/15	CHANGED PART NAME	C10-ZA96	R. M
⚠2	05/05/17	CHANGED FORM, ETC.	C05-Z801	S. T
⚠1	88/04/30	CHANGED PART NO., CHANGED AND ADDED NOTES	8MC-0491	H. S
	87/10/02	NEW	7MC-0608	H. S

ISSUE MARK

⚠2GENERAL TOLERANCE

	10MAX	50MAX	100MAX	250MAX	2500VR	ANGLE	ECCENT
A	±0.15	±0.2	±0.3	±0.5	±0.75	±30′	0.1
B	±0.2	±0.3	±0.55	±0.95	±1.4	±30′	0.1
Ⓒ	±0.3	±0.5	±0.8	±1.4	±2	±30′	0.15

SPECIFIED

MASS

CUSTOMER

CUSTOMER PART NO. | CUSTOMER DWG NO.

OFFICE | TRIAL PART NO.

VENDOR

VENDOR NO.

DWG TYPE	DWG SOURCE	DWG DATE	UNIT	SCL	ANGLE
R	NEW	87/10/02	mm	2:1	3

APPROVED	CHECKED	CHECKED	DESIGN	DRAWN
S. MIZUSE	———	R. CABANGAL	H. SAITOH	R. MAJERANO
10/11/15	———	10/11/15	87/10/02	10/11/15

MATL. SPEC. PBT

TREAT. & FIN.

NAME ⚠3SDL TYPE HOUSING
4P FEMALE

PART NO. CH. CODE ⚠1 7123-8345 ETC.

DWG NO. 7123-8345:R

SET DWG NO.

YAZAKI CORPORATION