| YAZAKI PART NO. AND CH. CODE | COLOR |
|---|---|
| 7123-7544-30 | BLACK |
| 7123-7544-40 | GRAY |

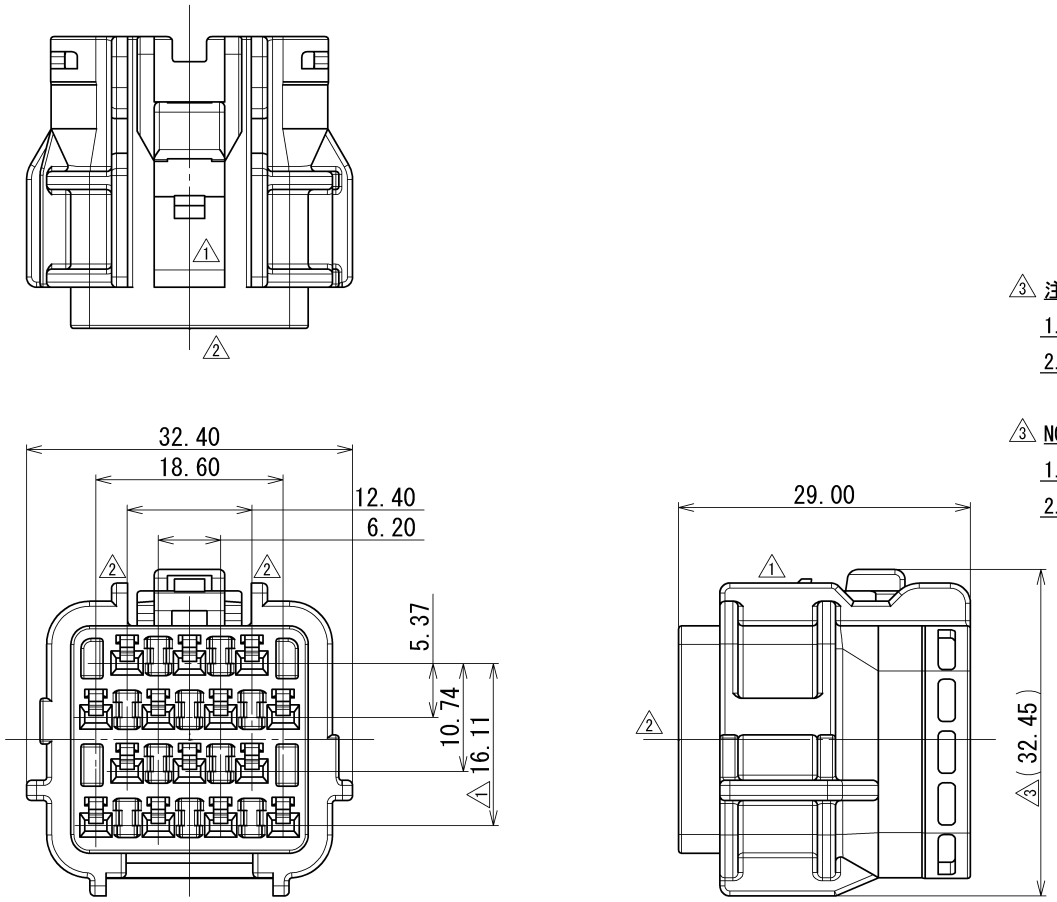


△3 注記

1. かん合相手品番 : 7222-7544-40, 7222-7544-30
2. 適用リアホルダ品番 : 7157-7818-80

△3 NOTES

1. MATING PART NO. : 7222-7544-40, 7222-7544-30
2. APPLICABLE REAR HOLDER PART NO. : 7157-7818-80

ISSUE MARK

| LET | DATE | REVISION RECORD | NO. | CHKD |
|---|---|---|---|---|
| △3 | 2011/11/28 | ADDED GENERAL TOLERANCE ETC. | C11-Z860 | G.M |
| △2 | 1990/10/10 | CHANGED FORM | C90-M057 | K.S |
| △1 | 1988/01/28 | CHANGED FORM | 8MC-0162 | S.Y |
| | 1987/09/16 | NEW | 7MC-0523 | S.Y |

△3 GENERAL TOLERANCE

| | 10MAX | 50MAX | 100MAX | 250MAX | 2500VR | ANGLE | ECCENT |
|---|---|---|---|---|---|---|---|
| A | ±0.15 | ±0.2 | ±0.3 | ±0.5 | ±0.75 | ±30' | 0.1 |
| B | ±0.2 | ±0.3 | ±0.55 | ±0.95 | ±1.4 | ±30' | 0.1 |
| Ⓒ | ±0.3 | ±0.5 | ±0.8 | ±1.4 | ±2 | ±30' | 0.15 |

SPECIFIED

MASS

| | |
|---|---|
| CUSTOMER | |
| CUSTOMER PART NO. | CUSTOMER DWG NO. |
| OFFICE | TRIAL PART NO. |
| VENDOR | |
| VENDOR NO. | |

| DWG TYPE | DWG SOURCE | DWG DATE | UNIT | SCL | ANGLE |
|---|---|---|---|---|---|
| R | NEW | 1987/09/18 | mm | 2:1 | 3 |

| APPROVED | CHECKED | CHECKED | DESIGN | DRAWN |
|---|---|---|---|---|
| H.KONDO | T.KOBAYASHI | ——— | YAMADA | G.MAGNAYON |
| 2011/11/28 | 2011/11/28 | ——— | 1987/09/16 | 2011/11/28 |

MATL. SPEC. △3 PBT(COLOR:SEE TABLE)

TREAT. & FIN.

NAME △3 SWP-TYPE HOUSING 14P F

PART NO. CH. CODE 7123-7544-40 ETC.

DWG NO. 7123-7544-30:R

SET DWG NO.

YAZAKI CORPORATION