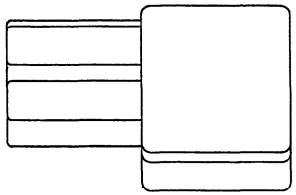

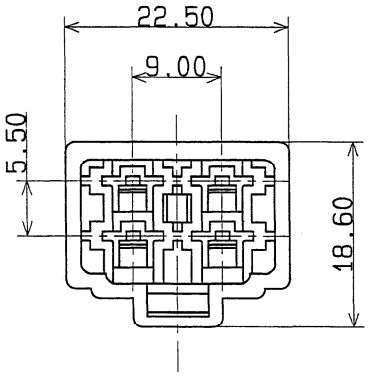

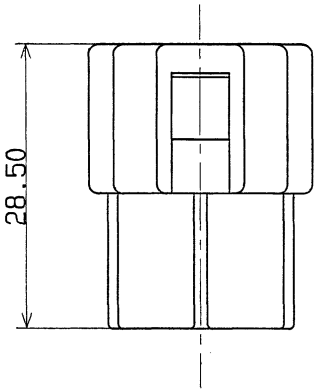

PART NO.	COLOR
7122-2840	NATURAL
7122-2840-10	DARK GRAY
7122-2840-30	BLACK
7122-2840-40	LIGHT GRAY
7122-2840-60	GREEN
7122-2840-70	YELLOW
7122-2840-80	BROWN
7122-2840-90	BLUE

注記

1.嵌合相手品番: 7123-2840 ETC.

NOTE

1.MATING PART NO.: 7123-2840 ETC.

ISSUE MARK

LET	DATE	REVISION RECORD	NO.	CHKD
	93.04.20	NEW	C93-L468	H.F

GENERAL TOLERANCE

	10MAX	50MAX	100MAX	250MAX	2500VR	ANGLE	ECCENT
A	±0.15	±0.2	±0.3	±0.5	±0.75	±30'	0.1
B	±0.2	±0.3	±0.55	±0.95	±1.4	±30'	0.1
©	±0.3	±0.5	±0.8	±1.4	±2	±30'	0.15

SPECIFIED

MASS g

CUSTOMER

CUSTOMER PART NO. | CUSTOMER DWG NO.

OFFICE

VENDOR

VENDOR NO.

TRIAL PART NO.

DWG TYPE	DWG SOURCE	DWG DATE	UNIT	SCL	ANGLE
R	NEW	93.04.20	mm	2/1	3

APPROVED	CHECKED	CHECKED	DESIGN	DRAWN
93.5.17		93.4.23	TAKENOUCHI 79.04.03	ISHIZUKA 93.04.20

MATL. SPEC. NYLON 66

TREAT. & FIN.

NAME 4P HOUSING MALE WITH HOUSING LANCE LOCK

PART NO. 7122-2840 ETC.

DWG NO. 7122-2840: R

YAZAKI CORPORATION