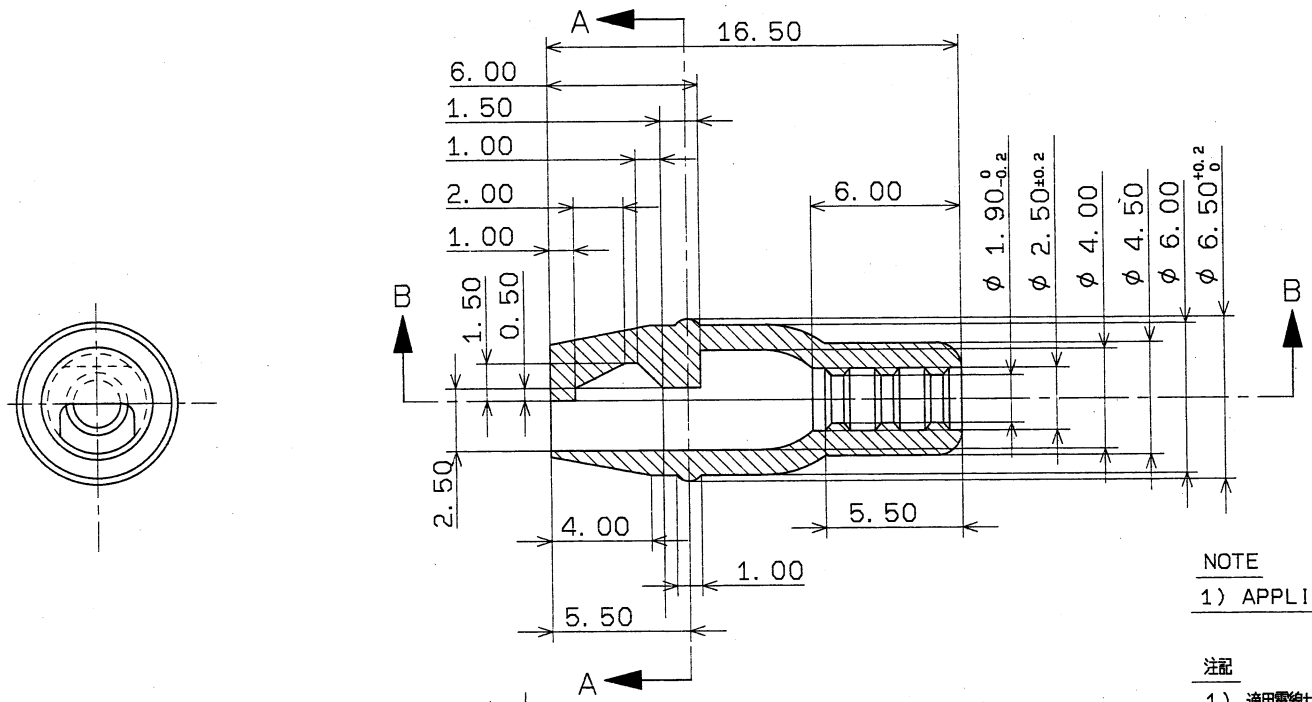

NOTE

1) APPLICABLE WIRE SIZE:AV 0.85

注記

1) 適用電線サイズ : AV 0.85

SEC. A-A

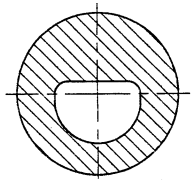

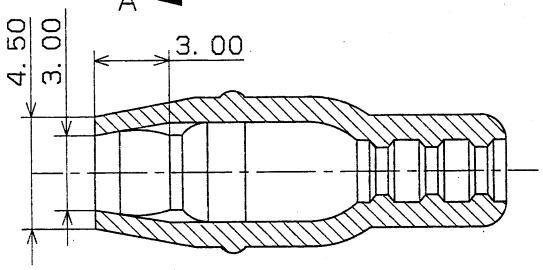

SEC. B-B

ISSUE MARK

LET	DATE	REVISION RECORD	NO.	CHKD
	86.11.14	NEW	C86-1231	N.W

GENERAL TOLERANCE

	10MAX	50MAX	100MAX	250MAX	2500VR	ANGLE	ECCENT
A	±0.15	±0.2	±0.3	±0.5	±0.75	±30'	0.1
B	±0.2	±0.3	±0.55	±0.95	±1.4	±30'	0.1
C	±0.3	±0.5	±0.8	±1.4	±2	±30'	0.15
Ⓢ	±0.5	±0.8	±1.5	±2	±3	±1°	0.3

CUSTOMER					
CUSTOMER PART NO.		CUSTOMER DWG NO.			
OFFICE		STDLIB NO.			
VENDOR					
VENDOR NO.					
DWG TYPE	DWG SOURCE	DWG DATE	UNIT	SCL	ANGLE
R	NEW	86.11.14	mm	5/1	3
APPROVED	CHECKED	CHECKED	DESIGN	DRAWN	
鈴木	遠藤	石崎	ISHIZAKI	N.W	
86.11.17	86.11.17	86.11.14	86.11.14	86.11.14	

MATL.	PVC	TREAT.	
SPEC.	CLEAR	& FIN.	
NAME	SURE PLUG WATER PROOF CAP		
PART NO.	7120-8013		
DWG NO.	7120-8013:R	TRIAL PART NO.	
YAZAKI CORPORATION			