PART NO. AND CH. CODE	②L1	②L2	W1	H1	W2	H2	B1	A1	A2	X	Y	Z
7116-3096-02	9.90	11.80	4.75	4.37	5.74	5.08	7.20	4.00	1.70	-	-	-
7116-3097-02, A	13.90	21.50	5.91	6.25	8.51	9.66	10.50	4.50	3.00	0.50	2.70	4.70
7116-3098-02	16.80	26.50	6.92	7.55	10.31	11.87	10.50	5.50	3.00	0.50	3.20	5.20
②7196-0515-02	8.90	10.90	4.30	4.19	5.10	4.98	7.20	4.00	1.70	-	-	-
②7196-0516-02	9.90	11.80	4.75	4.37	5.74	5.08	7.20	4.00	1.70	-	-	-

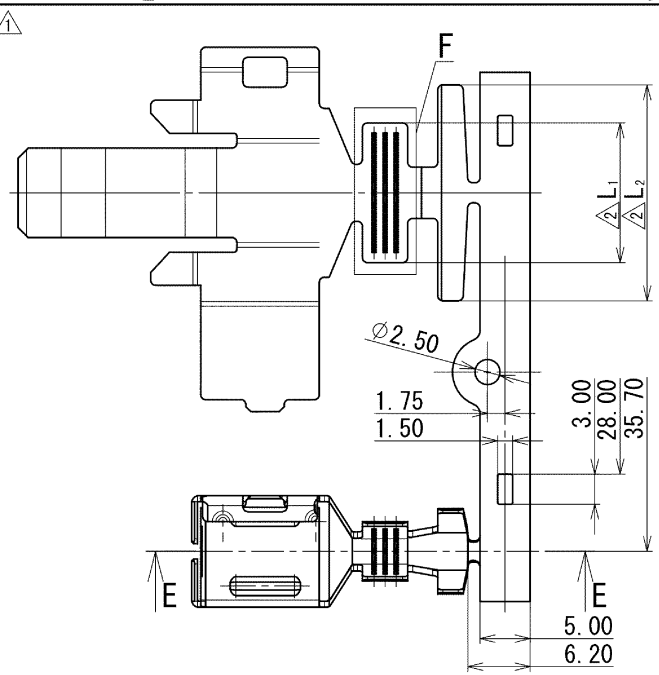

②DETAIL F

①NOTE

1. HANDLING MANUAL NO. YPES-15-521

①注記

1. 取扱説明書No. YPES-15-521

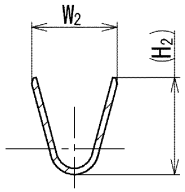

SEC. D-D

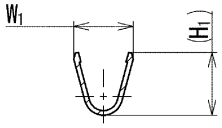

SEC. C-C

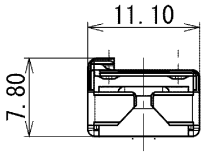

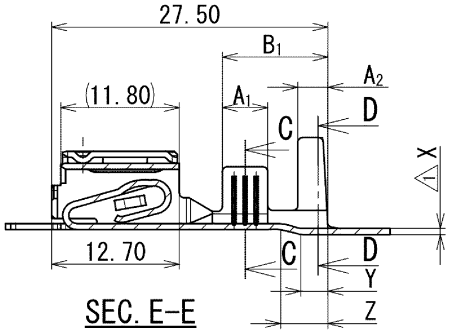

SEC. E-E

②	2015/09/02	ADDED PART NO.	C15-Z255	J. L
①	2013/11/07	ADDED NOTES ETC.	C13-Z492	M. V
	1998/08/19	NEW	C98-M460	H. T
LET	DATE	REVISION RECORD	NO.	CHKD

GENERAL TOLERANCE

	10MAX	50MAX	100MAX	250MAX	2500VR	ANGLE	ECCENT
A	±0.15	±0.2	±0.3	±0.5	±0.75	±30'	0.1
B	±0.2	±0.3	±0.55	±0.95	±1.4	±30'	0.1
C	±0.3	±0.5	±0.8	±1.4	±2	±30'	0.15

SPECIFIED

MASS g

CUSTOMER

CUSTOMER PART NO. | CUSTOMER DWG NO.

OFFICE | TRIAL PART NO.

VENDOR

VENDOR NO.

DWG TYPE	DWG SOURCE	DWG DATE	UNIT	SCL	ANGLE
R	NEW	1998/08/19	mm	2:1	3

APPROVED	CHECKED	CHECKED	DESIGN	DRAWN
S. SUZUKI	M. NAGANO	T. SHIMIZU	SAWADA	J. LABAN
2015/09/02	2015/09/02	2015/09/02	1998/07/22	2015/09/02

MATL. SPEC. COPPER ALLOY (t=0.60)

TREAT. & FIN.

NAME ①T9.5 RELAY TERMINAL FEMALE

PART NO. CH. CODE 7116-3096-02 ETC.

DWG NO. 7116-3096-02:R

SET DWG NO.

YAZAKI CORPORATION

ISSUE MARK