YAZAKI PART NO.	W_1	H_1	W_2	H_2	APPLICABLE WIRE SIZE
7116-2927-02	2.3	(2.6)	3.7	(2.9)	CAVUS, CAVS, AVS 0.3~0.5
7116-2928-02	3.1	(3.1)	5.5	(4.9)	CAVUS, CAVS, AVS 0.85~1.25
7116-2929-02	△1 4.3	△1 (4.4)	6.5	(6.4)	AVS 2~3, AVSS 2

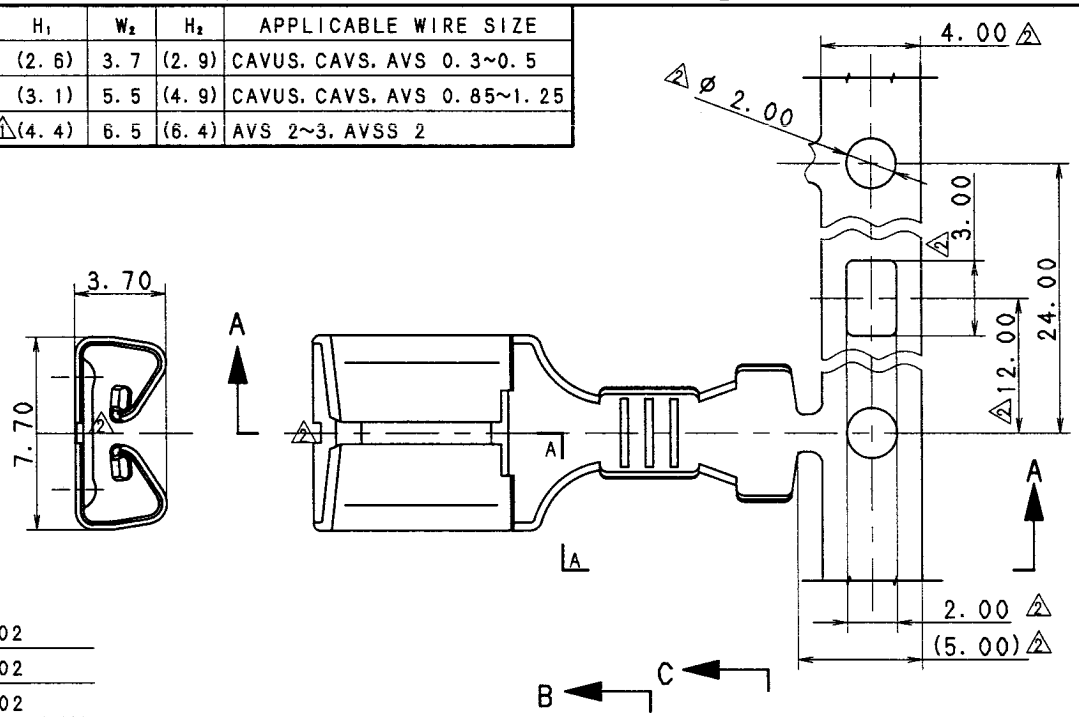

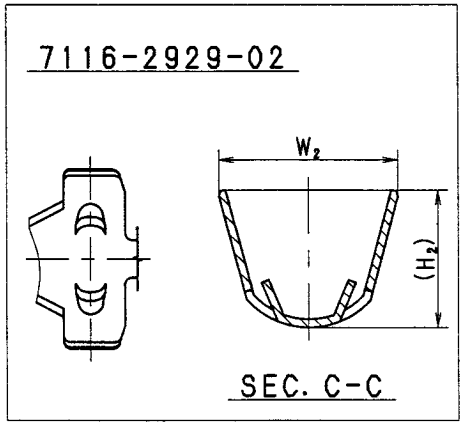

注 記

1. 嵌合相手品番：7114-2882-02
   ：7114-2883-02
   ：7114-2872-02

NOTE

1. MATING TERMINAL NO. ：7114-2882-02
   ：7114-2883-02
   ：7114-2872-02

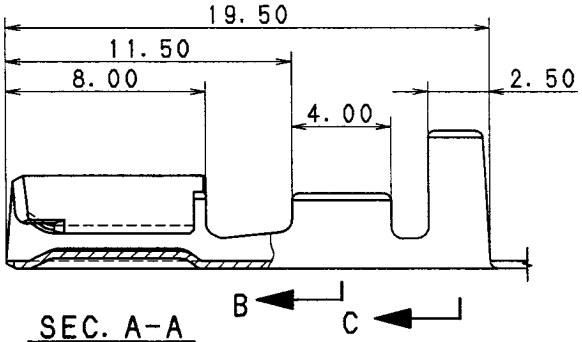

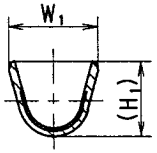

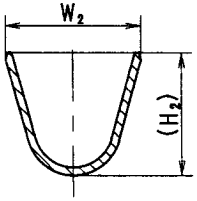

ISSUE MARK

LET	DATE	REVISION RECORD	NO.	CHKD
△2	98.03.17	CHANGED FORM & ADDED DIMENSION	C98-L139	H. Y
△1	97.09.26	CORRECTED AN ERROR	C97-M732	H. K
	96.07.11	NEW	C96-M327	H. K

GENERAL TOLERANCE

	10MAX	50MAX	100MAX	250MAX	2500VR	ANGLE	ECCENT
A	±0.15	±0.2	±0.3	±0.5	±0.75	±30′	0.1
B	±0.2	±0.3	±0.55	±0.95	±1.4	±30′	0.1
C	±0.3	±0.5	±0.8	±1.4	±2	±30′	0.15

SPECIFIED

MASS g

CUSTOMER

CUSTOMER PART NO. | CUSTOMER DWG NO.

OFFICE | TRIAL PART NO.

VENDOR

VENDOR NO.

DWG TYPE	DWG SOURCE	DWG DATE	UNIT	SCL	ANGLE
R	NEW	96.07.11	mm	5/1	3

APPROVED	CHECKED	CHECKED	DESIGN	DRAWN
神田	辻	青柳	H. YOSHIDA	吉田
98.03.23	98.03.19	98.03.18 98.03.17	96.06.24	98.03.17

MATL. COPPER ALLOY (t=0.30)
SPEC. TIN PLATING

TREAT. & FIN.

NAME MF-H-SN TERMINAL

PART NO. / CH. CODE 7116-2927-02 ETC.

DWG NO. 7116-2927-02：R

SET DWG NO.

YAZAKI CORPORATION