PART NO. AND CH. CODE	②MATERIAL
7116-2033	BRASS (t=0.4)
7116-2033-02	BRASS (t=0.4) TIN PLATING

注記

1) 適用電線サイズ: AV3

②NOTE

1) APPLICABLE WIRE SIZE: AV3

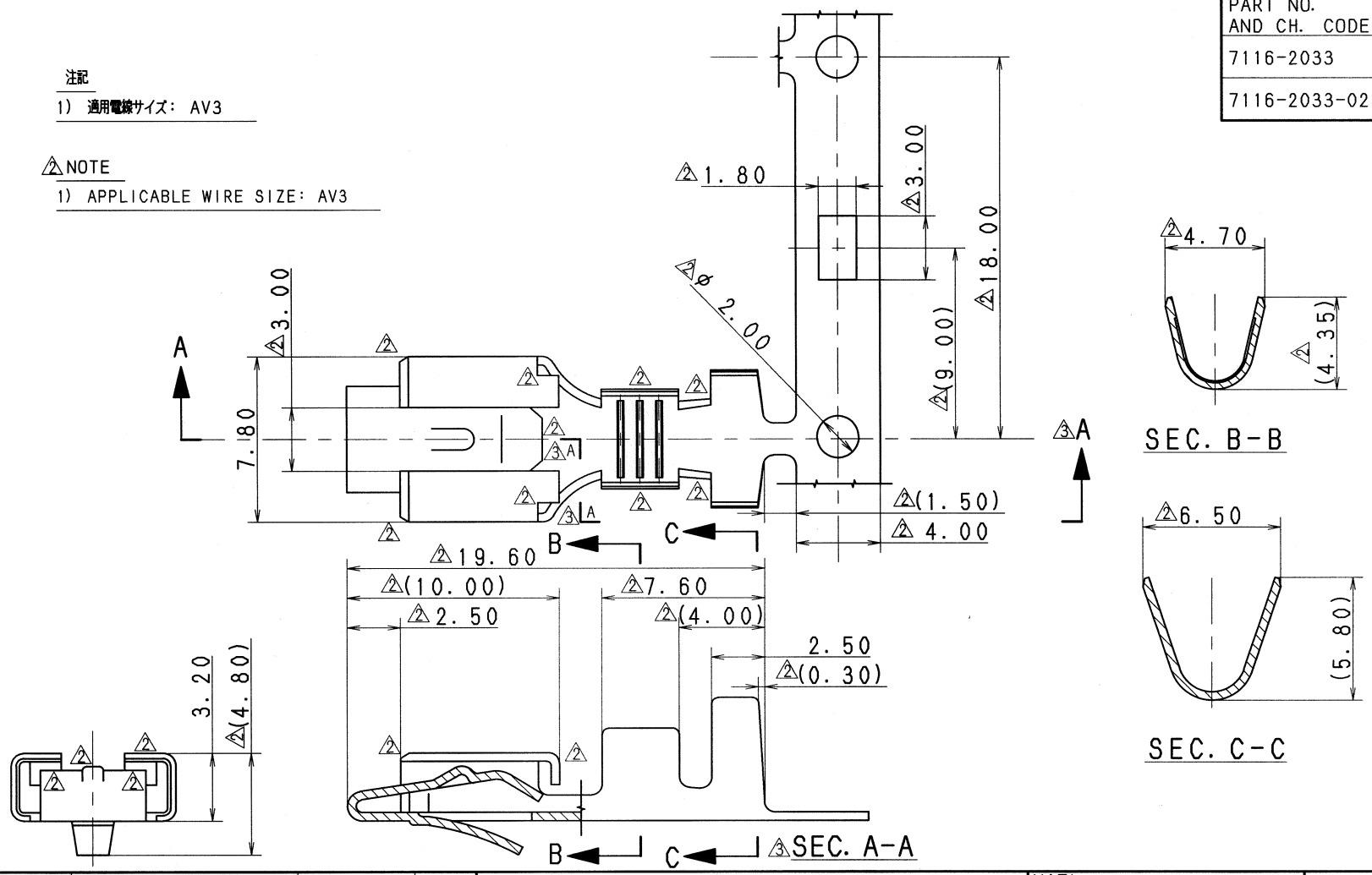

LET	DATE	REVISION RECORD	NO.	CHKD
③	05/11/30	ELIMINATED PART NO., ETC.	C05-ZF67	H. T
②	05/04/14	CHANGED FORM, ETC.	C05-Z662	N. T
①	82/08/31	ADDED PART NO.	C82-2768	佐原
	81/11/30	NEW	C81-2960	竹之内

②GENERAL TOLERANCE

	10MAX	50MAX	100MAX	250MAX	2500VR	ANGLE	ECCENT
A	±0.15	±0.2	±0.3	±0.5	±0.75	±30′	0.1
B	±0.2	±0.3	±0.55	±0.95	±1.4	±30′	0.1
Ⓒ	±0.3	±0.5	±0.8	±1.4	±2	±30′	0.15

SPECIFIED

MASS g

CUSTOMER

CUSTOMER PART NO. | CUSTOMER DWG NO.

OFFICE | TRIAL PART NO.

VENDOR

VENDOR NO.

DWG TYPE	DWG SOURCE	DWG DATE	UNIT	SCL	ANGLE
R	NEW	81/11/30	mm	5:1	3

APPROVED	CHECKED	CHECKED	DESIGN	DRAWN
山梨	田口	田中	TAKENOUCHI	O. DAR
'05.12.20	'05.12.19	05/12/19	80/11/27	05/11/30

MATL. SPEC. ②SEE TABLE

TREAT. & FIN. ②SEE TABLE

NAME ③6.3 TERMINAL FEMALE (USE FOR 1P)

PART NO. CH. CODE 7116-2033 ETC.

DWG NO. 7116-2033:R

SET DWG NO.

YAZAKI CORPORATION

ISSUE MARK