⚠1 PART NO. AND CH. CODE	TREATMENT	⚠4 I	⚠4 J	⚠4 K	⚠4 L	WIRE SIZE
7116-1521	TIN PLATING	5.60	6.00	3.80	3.60	AVS1.25~AVSS2 EQUIVALENT
7116-1521-08	GOLD PLATING					
⚠4 7116-1558-08	GOLD PLATING					
7116-1520	TIN PLATING	5.10	5.60	2.90	2.20	⚠2 AVS0.5~AV0.85 EQUIVALENT
7116-1520-08	GOLD PLATING					
⚠4 7116-1557-08	GOLD PLATING			⚠5 3.10	⚠5 2.70	

⚠5 GENERAL TOLERANCE

	10MAX	50MAX	100MAX	250MAX	2500VR	R5MAX	R10MAX	R20MAX	R200VR	ANGLE	ECCENT
A	±0.15	±0.2	±0.3	±0.5	±0.75	±0.2	±0.3	±0.5	±2.5	±3°	0.1
B	±0.2	±0.3	±0.55	±0.95	±1.4					±3°	0.1
(C)	±0.3	±0.5	±0.8	±1.4	±2					±3°	0.15

⚠5 注記

1. 本品は、バネ片（7157-8608, -8608-08）と構成する.
2. 嵌合相手端子：7114-1230（Sタイプターミナル）

⚠5 NOTES

1. THIS PART MUST BE ASSEMBLED WITH SPRING (7157-8608, -8608-08).
2. MATING PART TERMINAL:7114-1230 (S TYPE TERMINAL)

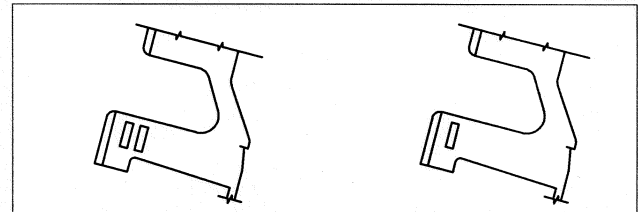

⚠4 VIEW C
適用電線識別マーク
WIRE SIZE IDENTIFICATION MARK

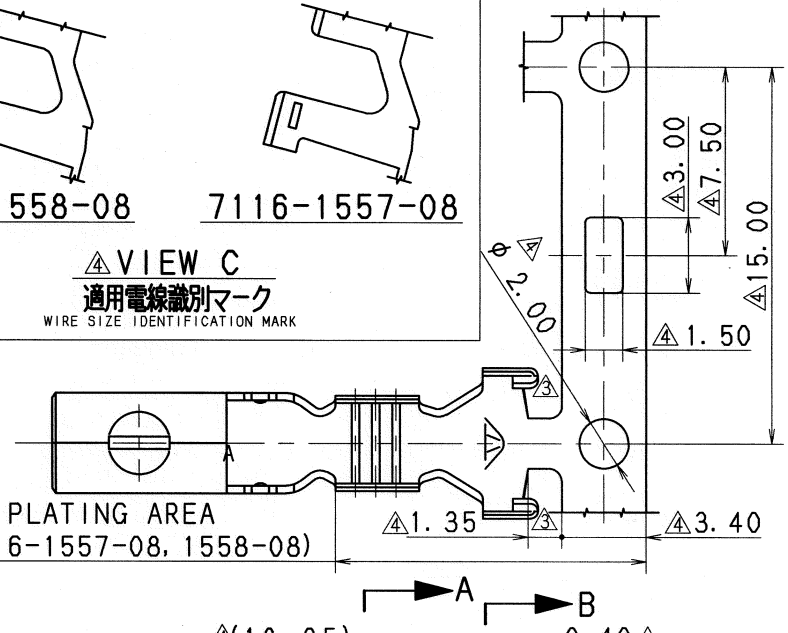

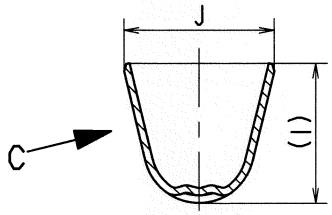

⚠4 SEC. B-B

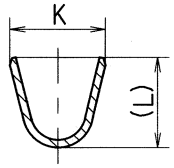

⚠4 SEC. A-A

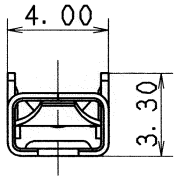

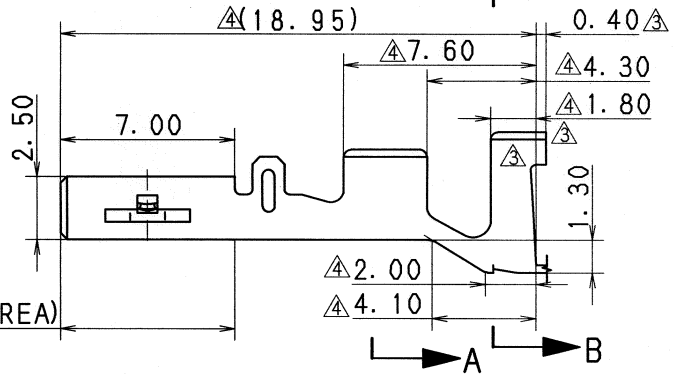

LET	DATE	REVISION RECORD	NO.	CHKD
⚠5	05/10/05	CHANGED PART NO. TABLE, ETC.	C05-ZC97	Y. W
⚠4	01/02/12	ADDED DIMENSION & PART NO.	C01-X123	H. T
⚠3	90/09/04	CHANGED FORM	C90-L994	T. S
⚠2	90/04/09	CHANGED APPLICABLE WIRE SIZE	C90-L238	M. K
⚠1	89/06/08	表題欄及び部品欄変更	C89-6948	大 崎
	87/11/20	新 設	7MC-0790	石 井

GENERAL TOLERANCE

	10MAX	50MAX	100MAX	250MAX	2500VR	ANGLE	ECCENT
A	±0.15	±0.2	±0.3	±0.5	±0.75	±30′	0.1
B	±0.2	±0.3	±0.55	±0.95	±1.4	±30′	0.1
C	±0.3	±0.5	±0.8	±1.4	±2	±30′	0.15

SPECIFIED

MASS g

ISSUE MARK

CUSTOMER	
CUSTOMER PART NO.	CUSTOMER DWG NO.
OFFICE	TRIAL PART NO.
VENDOR	
VENDOR NO.	

DWG TYPE	DWG SOURCE	DWG DATE	UNIT	SCL	ANGLE
R	NEW	87/01/28	mm	⚠4 5:1	3

APPROVED	CHECKED	CHECKED	DESIGN	DRAWN
	和田	酒井	ISHII	E. PANTONI RONEL GALIZA
05.10.25	05.10.24	05.10.06	87/11/20	05/10/05

MATL. SPEC. ⚠5 BRASS (t=0.3)

TREAT. & FIN. SEE TABLE

NAME ⚠1 DMS TERMINAL

PART NO. CH. CODE 7116-1520 ETC.

DWG NO. ⚠1 7116-1520:R

SET DWG NO.

YAZAKI CORPORATION