品番 PART NO.	処理 TREATMENT	嵌合相手品番 MATING PART NO.
7115-1591	銅下地 光沢錫メッキ条材 COPPER SUBSTRATE PLATING. GLOSSY TIN PLATING(STRIP)	7113-2331
7115-1591-08	ニッケル下地 金メッキ 金フラッシュ メッキ NICKEL SUBSTRATE PLATING. GOLD PLATING. GOLD FLASH PLATING	7113-2331-08

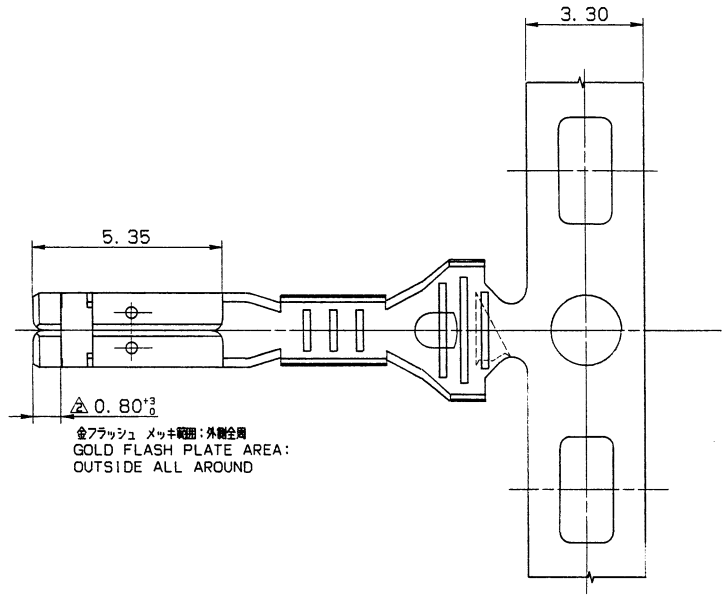

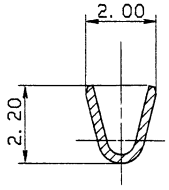

SEC. A-A

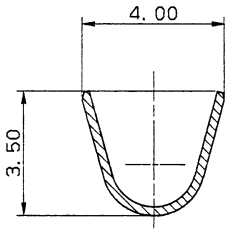

SEC. B-B

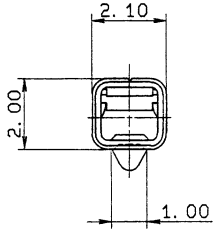

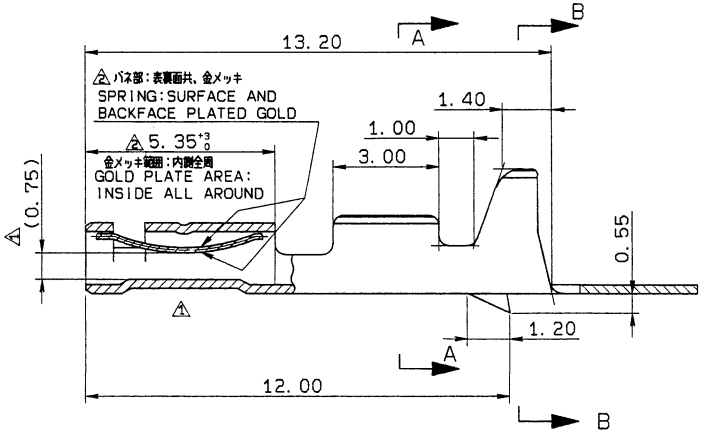

NOTES

1) APPLICABLE WIRE SIZE: AVS0.2 TO AVS0.5
2) MATERIAL. BODY:C2600 , t=0.25
SPRING:C1720. t=0.15
3) INSERTION FORCE: 100 - 500 g
SEPARATION FORCE: 100 - 400 g (CONTACT FORCE:450-600 g)

注記

1) 適用電線サイズ:AVS0.2~AVS0.5
2) 材質 本体:C2600. t=0.25
バネ:C1720. t=0.15
3) 挿入力:100~500g
離脱力:100~400g (接圧:450~600g)

ISSUE MARK

2	90.02.19	ADDED NEW PART NO.	C90-6142	K.S
1	86.04.30	CHANGED FORM & RENEW	C86-5493	T.M
	85.11.11	NEW	C85-6148	H.H
LET	DATE	REVISION RECORD	NO.	CHKD

GENERAL TOLERANCE

	10MAX	50MAX	100MAX	250MAX	2500VR	ANGLE	ECCENT
A	±0.15	±0.2	±0.3	±0.5	±0.75	±30'	0.1
B	±0.2	±0.3	±0.55	±0.95	±1.4	±30'	0.1
C	±0.3	±0.5	±0.8	±1.4	±2	±30'	0.15

SPECIFIED WEIGHT 0.16 g

CUSTOMER					
CUSTOMER PART NO.	CUSTOMER DWG NO.				
OFFICE	STDLIB NO.				
VENDOR					
VENDOR NO.					
DWG TYPE	DWG SOURCE	DWG DATE	UNIT	SCL	ANGLE
R	NEW	82.04.27	mm	10/1	3
APPROVED	CHECKED	CHECKED	DESIGN	DRAWN	
道平	石崎	高瀬	WATANABE	長谷川	
90.2.22	90.2.17		82.04.27	90.02.19	

MATL. SPEC. SEE NOTES
TREAT. & FIN. SEE TABLE
NAME TLC TERMINAL FEMALE
PART NO. 7115-1591 ETC
DWG NO. 7115-1591:R
TRIAL PART NO.

YAZAKI CORPORATION