PART NO. AND CH. CODE	H_1	③ W_1 ±0.4	H_2	③ W_2 ±0.4	X	Y	Z	WIRE SIZE
7114-6045	③(3.34)	3.60	③(4.93)	5.80	0	0	0	AVS 0.5~AVS 1.25 EQUIVALENT
7114-6046	③(4.62)	4.90	③(6.10)	7.40	0	0	0	AVS 2~AVS 3 EQUIVALENT
7114-6047	③(6.48)	6.80	③(8.29)	9.90	1.10	4.00	5.50	AVS 5~AV 8 EQUIVALENT

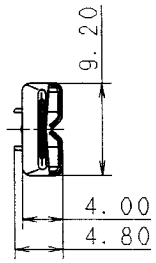

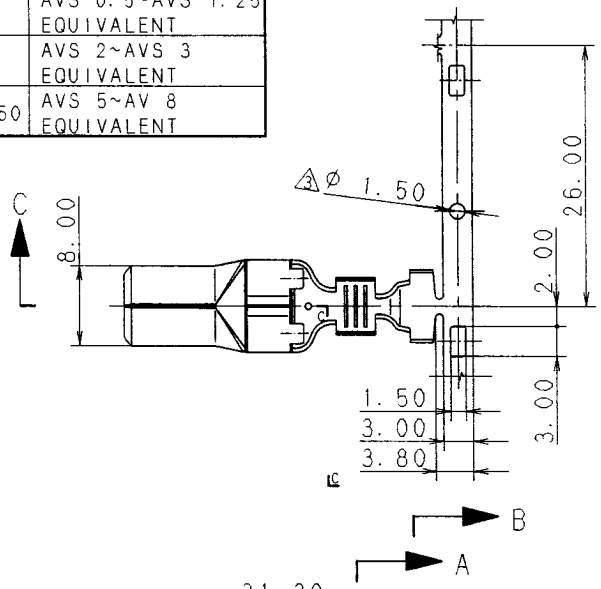

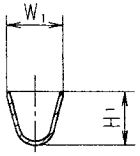

SEC. A-A

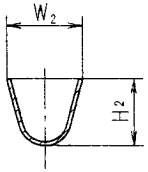

SEC. B-B

注 記

1. 嵌合相手品番：7116-6045 ETC.

③ 2. 適用ゴム栓品番：7158-3022-80 ETC.

NOTES

1. MATING PART NO. :7116-6045 ETC.

③ 2. APPLICABLE RUBBER STOPPER NO. :7158-3022-80 ETC.

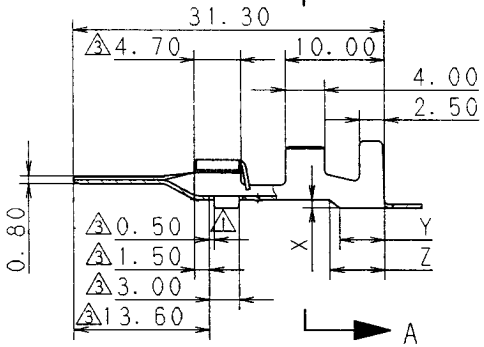

SEC. C-C

LET	DATE	REVISION RECORD	NO.	CHKD
③	98.08.04	CHANGED NOTES & DIMENSION	C97-N465	H.K
②	97.11.10	CHANGED TABLE	C97-8362	T.M
①	90.03.06	CHANGED FORM	C90-L254	K.O
	89.10.11	NEW	C89-M092	H.Y

GENERAL TOLERANCE

	10MAX	50MAX	100MAX	250MAX	2500VR	ANGLE	ECCENT
A	±0.15	±0.2	±0.3	±0.5	±0.75	±30′	0.1
B	±0.2	±0.3	±0.55	±0.95	±1.4	±30′	0.1
Ⓒ	±0.3	±0.5	±0.8	±1.4	±2	±30′	0.15

SPECIFIED

MASS g

CUSTOMER

CUSTOMER PART NO. | CUSTOMER DWG NO.

OFFICE | TRIAL PART NO.

VENDOR

VENDOR NO.

DWG TYPE	DWG SOURCE	DWG DATE	UNIT	SCL	ANGLE
R	NEW	89.10.19	mm	② 2/1	3

APPROVED	CHECKED	CHECKED	DESIGN	DRAWN
加藤	山梨	芳福	SUEYOSHI	M. YASUDA 遠藤友
98.8.27	98.08.26	98.08.17	87.08.08	98.08.04

MATL. SPEC. ③ C2600 (t=0.40) TIN PLATING

TREAT. & FIN.

NAME 312 SEALED TERMINAL MALE

PART NO. CH. CODE 7114-6045 ETC.

DWG NO. 7114-6045:R

SET DWG NO.

YAZAKI CORPORATION

ISSUE MARK