PART NO. AND CH. CODE	A_1	A_2	R_1	R_2	H_1	H_2	WIRE SIZE (mm²)
7114-4102-02	2.50	4.85	0.45	1.45	(2.40)	(4.20)	⚠0.3 ~ 0.5 EQUIVALENT
7114-4103-02	3.30	5.00	0.65		(3.20)	(4.45)	⚠0.6 ~ 1.25 EQUIVALENT

APPLICABLE WIRE SIZE MARK

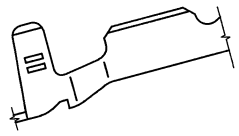

(7114-4103-02)

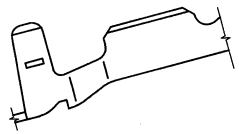

(7114-4102-02)

VIEW C

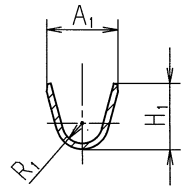

SEC. A-A

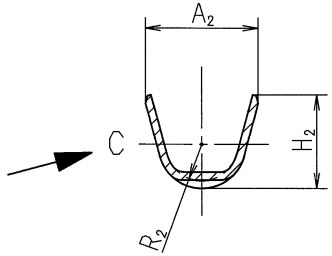

SEC. B-B

注 記

1) 材質: 銅合金 t=0.30
2) 適用ゴム栓品番 : 7158-3030-50 ETC.
3) 嵌合相手端子品番: 7116-4102-02 ETC.

NOTES

1) MATERIAL: COPPER ALLOY t=0.30
2) APPLICABLE WIRE SEAL NO. : 7158-3030-50 ETC.
3) MATING TERMINAL NO. : 7116-4102-02 ETC.

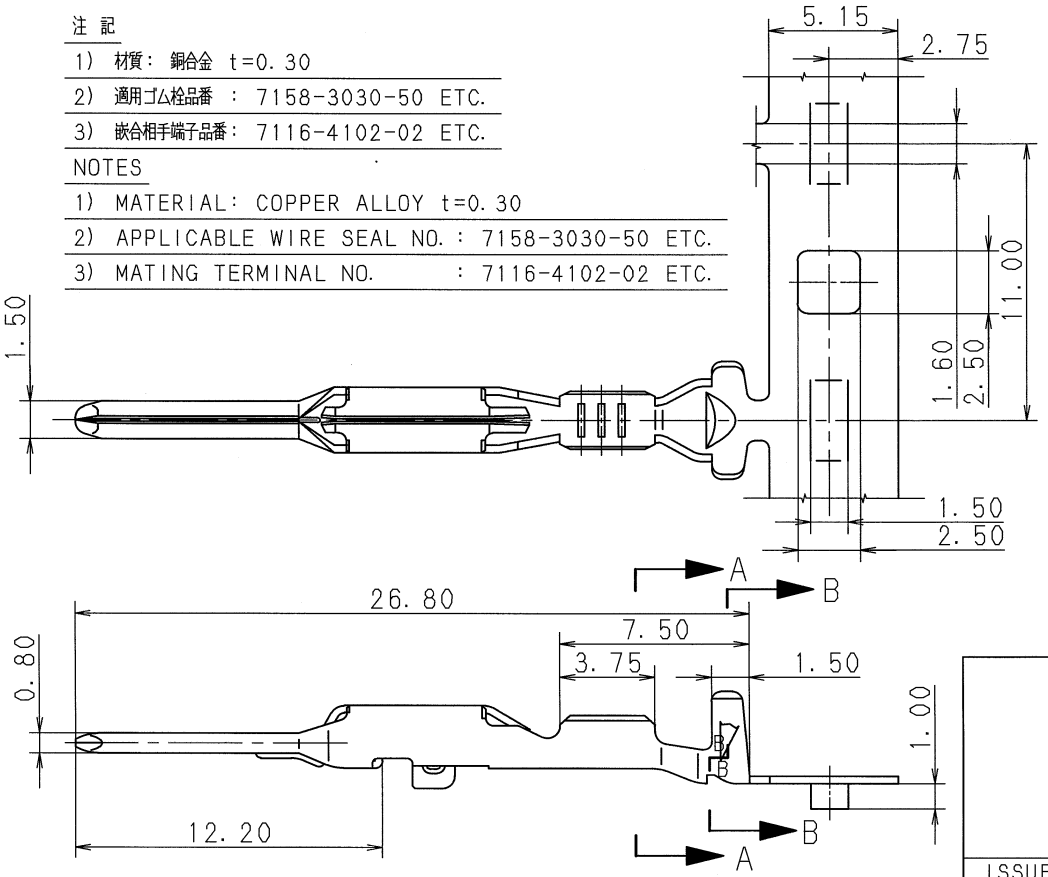

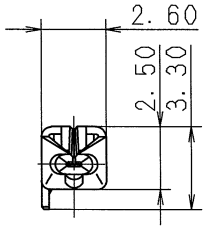

ISSUE MARK

LET	DATE	REVISION RECORD	NO.	CHKD
⚠	03.07.07	CHANGED WIRE SIZE & CORRECTION OF A CLERICAL ERROR	C03-X434	K.O
	96.04.16	NEW	C96-L509	H.K

GENERAL TOLERANCE

	10MAX	50MAX	100MAX	250MAX	2500VR	ANGLE	ECCENT
A	±0.15	±0.2	±0.3	±0.5	±0.75	±30′	0.1
B	±0.2	±0.3	±0.55	±0.95	±1.4	±30′	0.1
Ⓒ	±0.3	±0.5	±0.8	±1.4	±2	±30′	0.15

SPECIFIED

MASS 9

CUSTOMER

CUSTOMER PART NO. | CUSTOMER DWG NO.

OFFICE | TRIAL PART NO.

VENDOR

VENDOR NO.

DWG TYPE	DWG SOURCE	DWG DATE	UNIT	SCL	ANGLE
R	NEW	96.04.16	mm	⚠5/1	3

APPROVED	CHECKED	CHECKED	DESIGN	DRAWN
竹内	土井	梅本 倉	Y. TOMITA	Y. OHKUBO 原
'03.8.20	'03.8.20	'03.8.19	96.04.16	03.07.07

MATL. SPEC. SEE NOTES | TREAT. & FIN.

NAME 1.5 SYSTEM SEALED CONNECTOR MALE TERMINAL (TIN PLATED)

PART NO. CH. CODE 7114-4102-02 ETC.

DWG NO. 7114-4102-02:R | SET DWG NO.

YAZAKI CORPORATION