PART NUMBER	WIRE SIZE	E	F	H	I	REMARK
7114-2251	AV 0.85~2	3.6	3.5	5.5	4.8	
7114-2252	AV 3	4.7	4.5	6.5	5.9	
7114-2251-02	AV 0.85~2	3.6	3.5	5.5	4.8	TIN PLATED
7114-2252-02	AV 3	4.7	4.5	6.5	5.9	TIN PLATED

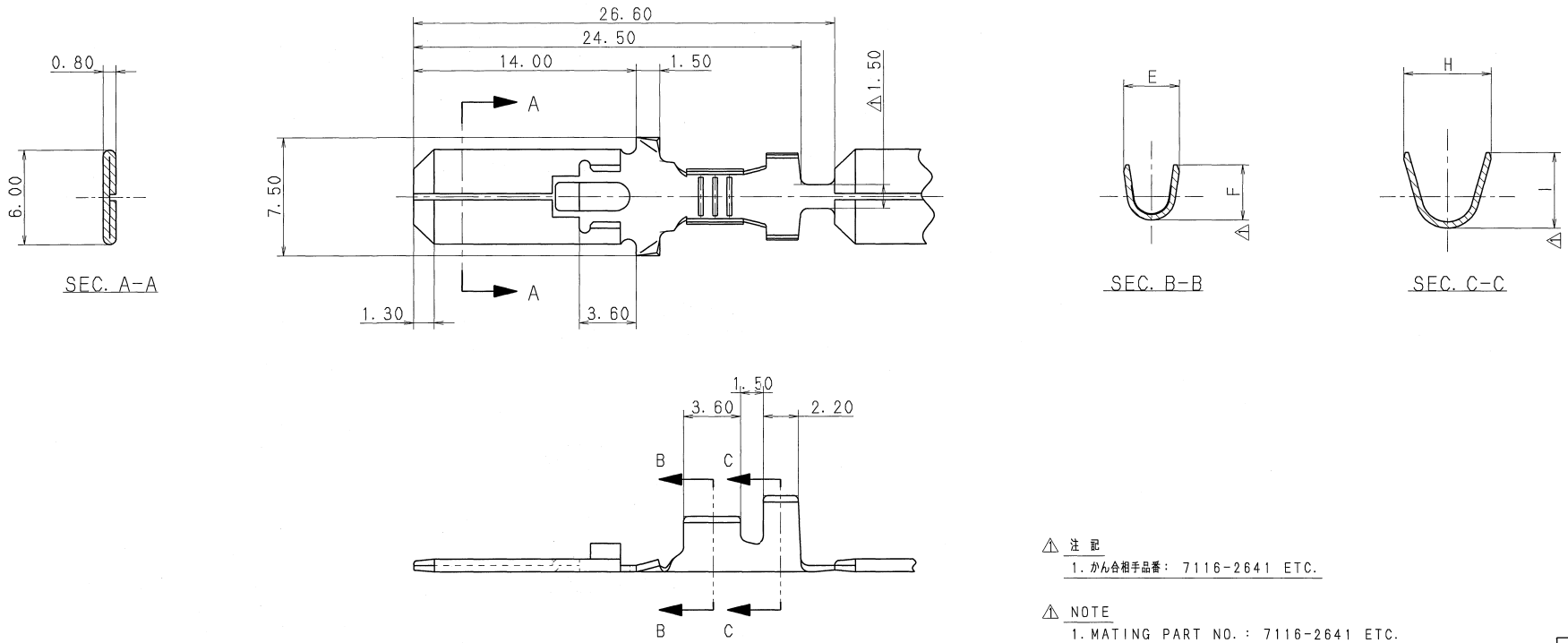

注 記
1. かん合相手品番: 7116-2641 ETC.

NOTE
1. MATING PART NO.: 7116-2641 ETC.

ISSUE MARK

LET	DATE	REVISION RECORD	NO.	CHKD
2	13.02.19	CHANGED MATERIAL INDICATION	C13-Z091	J. B
1	93.11.09	ADDED NOTE ETC.	C93-7090	Y. I
-	88.04.14	NEW	8MC-0448	M. H

GENERAL TOLERANCE

	10MAX	50MAX	100MAX	250MAX	2500VR	ANGLE	ECCENT
A	±0.15	±0.2	±0.3	±0.5	±0.75	±30′	0.1
B	±0.2	±0.3	±0.55	±0.95	±1.4	±30′	0.1
C	±0.3	±0.5	±0.8	±1.4	±2	±30′	0.15

SPECIFIED

MASS 9

CUSTOMER					
CUSTOMER PART NO.		CUSTOMER DWG NO.			
OFFICE		TRIAL PART NO.			
VENDOR					
VENDOR NO.					
DWG TYPE	DWG SOURCE	DWG DATE	UNIT	SCL	ANGLE
R	NEW	88.04.14	mm	5/1	3
APPROVED	CHECKED	CHECKED	DESIGN	DRAWN	
K. SUZUKI			H. HARADA	J. BUTALON	
13.02.19			88.04.14	13.02.19	

MATL. SPEC. 2 BRASS (t=0.4)

TREAT. & FIN.

NAME 250 TERMINAL MALE FOR HOUSING LANCE CONNECTOR

PART NO. 7114-2251 ETC.

DWG NO. 7114-2251:R

YAZAKI CORPORATION