3	PART NO. AND CH. CODE	TREAT. & FIN.	MATING PART NO.
	7114-1471 3(7B14-1471)	TIN PLATING	7116-1471 (7B16-1471)
3	7114-1471-08 (7B14-1471-08)	GOLD PLATING	7116-1471-08 (7B16-1471-08)
3	7114-1571-08 (7B14-1571-08)	GOLD PLATING	7116-1571-08 (7B16-1571-08)

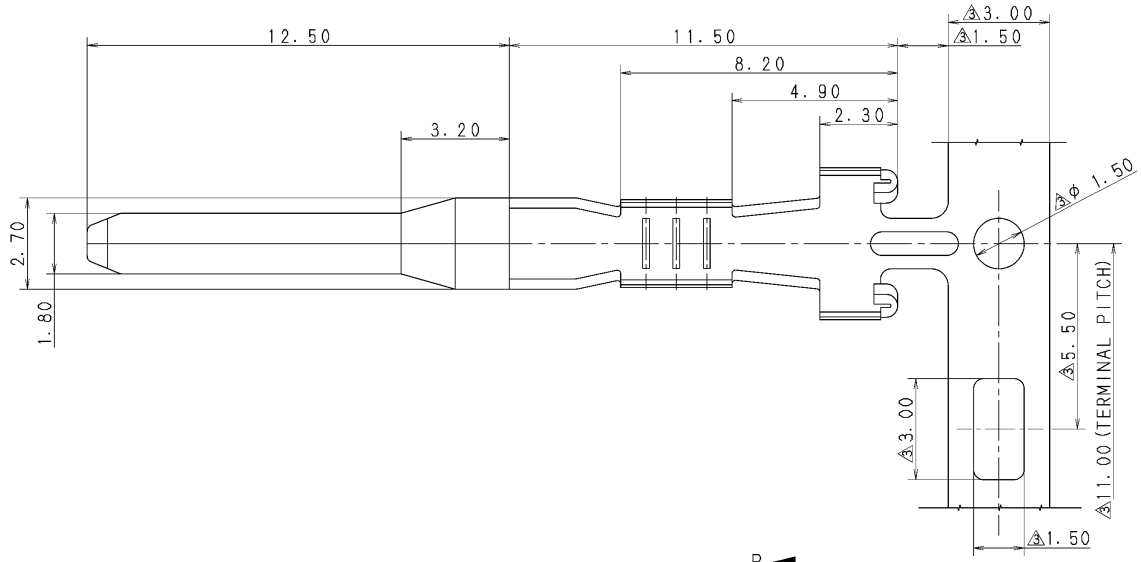

3 注記

1. 適用電線サイズ ： CAVS 0.3~AVS 0.85相当
2. 適用ゴム栓品番 ： 7157-3271-60 ETC.
3. かん合相手品番 ： SEE TABLE
4. ( ) 内品番は、エアーバッグ (A/B) 回路及び特別管理回路に使用する時に適用すること。

3 NOTES

1. APPLICABLE WIRE SIZE : CAVS 0.3~AVS 0.85 OR EQUIVALENT
2. APPLICABLE RUBBER SEAL PART NO. : 7157-3271-60 ETC.
3. MATING PART NO. : SEE TABLE
4. PART NUMBERS IN PARENTHESIS SHALL BE USED FOR AIR BAG (A/B) CIRCUITS AND OTHER CIRCUITS DESIGNATED FOR SPECIAL MONITORING.

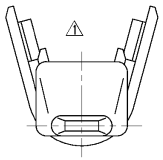

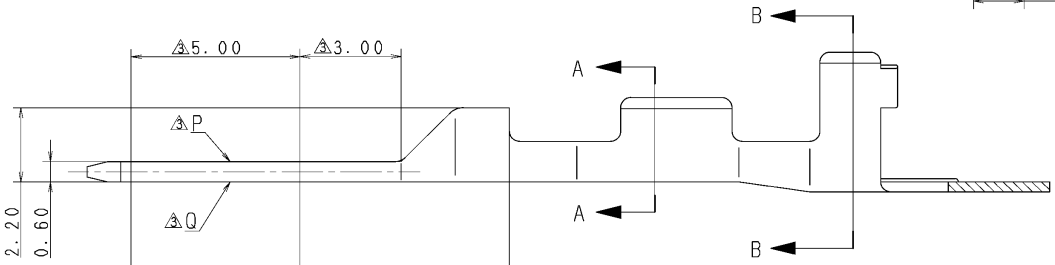

3GOLD PLATED
:P, Q TWO SIDES
(P, Q両面に金めっき)

3 7114-1571-08 (7B14-1571-08) のみの金フラッシュめっき範囲
THE AREA OF GOLD FLASH PLATED FOR 7114-1571-08 (7B14-1571-08) ONLY

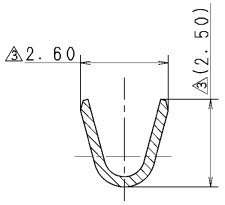

SEC. A-A

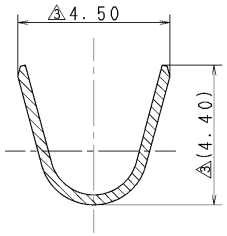

SEC. B-B

ISSUE MARK

3	10.11.30	ADDED PART NO. ETC.	C10-Z369	T.W
2	89.04.12	ADDED ENGLISH NOTES.	C89-6582	矢部
1	87.06.12	ADDED LARGE SIZE TRM.	7MC-0272	S.Y
	86.06.02	NEW	C86-0548	S.K
LET	DATE	REVISION RECORD	NO.	CHKD

2 GENERAL TOLERANCE

	10MAX	50MAX	100MAX	250MAX	2500VR	ANGLE	ECCENT
A	±0.15	±0.2	±0.3	±0.5	±0.75	±30′	0.1
B	±0.2	±0.3	±0.55	±0.95	±1.4	±30′	0.1
Ⓒ	±0.3	±0.5	±0.8	±1.4	±2	±30′	0.15

SPECIFIED MASS

CUSTOMER	
CUSTOMER PART NO.	CUSTOMER DWG NO.
OFFICE	STDLIB NO.
VENDOR	
VENDOR NO.	

DWG TYPE	DWG SOURCE	DWG DATE	UNIT	SCL	ANGLE
R 2	NEW	86.06.02	mm	10:1	3

APPROVED	CHECKED	CHECKED	DESIGN	DRAWN
H. KONDO	K. SUZUKI	T. WATANABE	S. YAMADA	J. GALLARES
10.11.30	10.11.30	10.11.30	86.05.27	10.11.30

MATL. SPEC. 3BRASS (t=0.3)
TREAT. & FIN. 3SEE TABLE

NAME SWP TYPE TERMINAL M

PART NO. 3 7114-1471 ETC. (7B14-1471 ETC.)

DWG NO. 7114-1471:R

SET DWG NO.

YAZAKI CORPORATION